EXHIBIT "A"

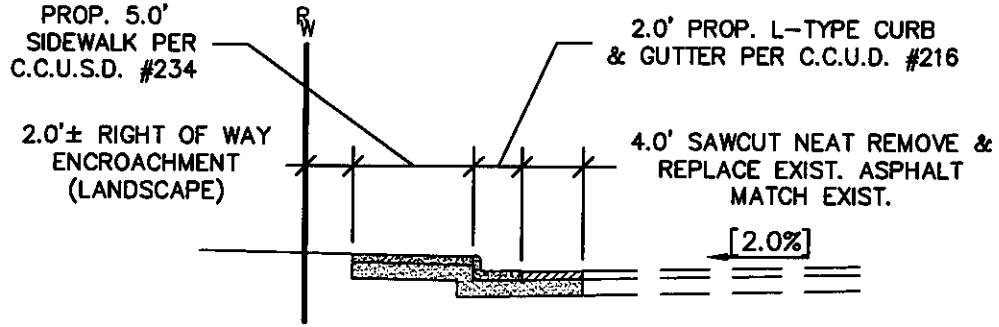

TYPICAL SECTION DECATUR BLVD.

NTS

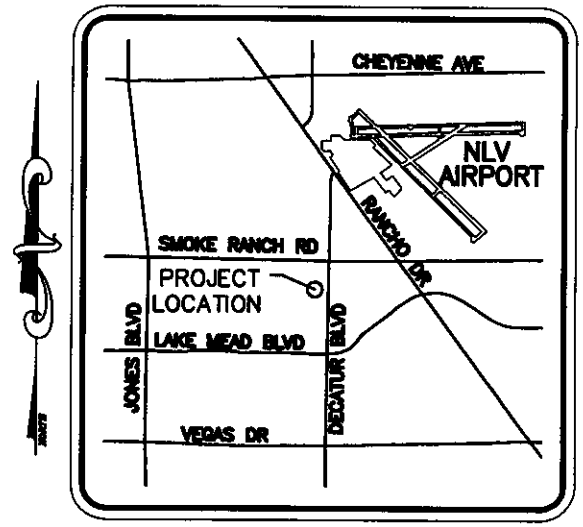

VICINITY MAP

NTS

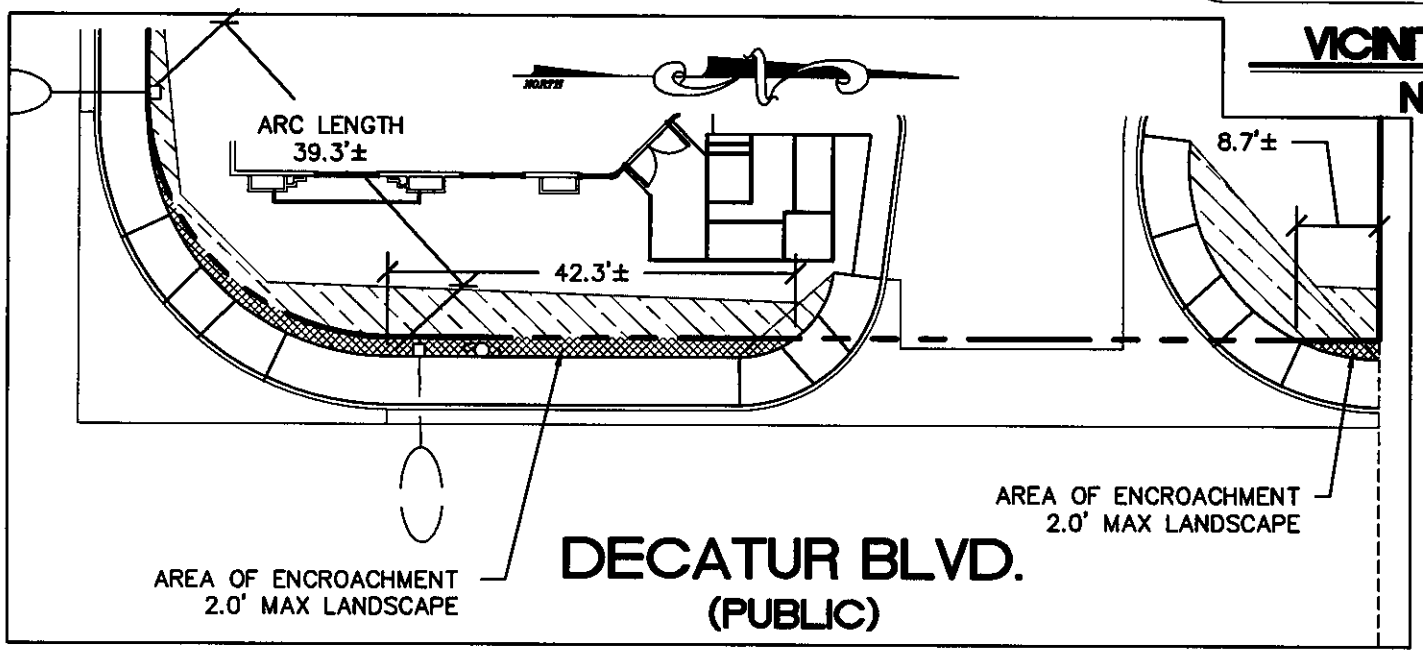

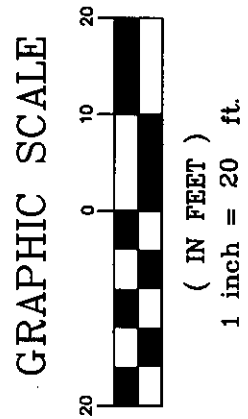

SIGHT VISIABLITY ZONE = AREA OF ENCROACHMENT =