**FIRST AMENDMENT**

**BILL NO. 2006-77**

**ORDINANCE NO. _____**

AN ORDINANCE TO ADOPT AS THE CITY'S BUILDING CODE THE 2006 EDITIONS OF THE INTERNATIONAL BUILDING CODE AND INTERNATIONAL RESIDENTIAL CODE, TOGETHER WITH AMENDMENTS THERETO, AND TO PROVIDE FOR OTHER RELATED MATTERS.

Proposed by: Paul K. Wilkins, Director of Building and Safety

Summary: Adopts the 2006 Editions of the International Building Code and the International Residential Code, together with amendments thereto.

THE CITY COUNCIL OF THE CITY OF LAS VEGAS DOES HEREBY ORDAIN AS FOLLOWS:

SECTION 1: Title 16, Chapter 4, Section 10, of the Municipal Code of the City of Las Vegas, Nevada, 1983 Edition, is hereby amended to read as follows:

**16.04.010:** A building code is established and adopted for the City. The building code adopted by this Section, to be known as the City's Building Code, shall consist of the following documents, which are adopted by this reference and a copy of which shall be maintained on file in the Office of the City Clerk:

(A) The publication entitled [“International Building Code, 2003 Edition,”] <u>“International Building Code, 2006 Edition,”</u> as modified herein, including all Appendices, [other than Appendices A, B, D and G, which are not adopted.] <u>except as otherwise specified.</u> This publication, as modified, is designated as Part 1 of this Chapter.

(B) The document entitled [“City of Las Vegas Amendments to the 2003 International Building Code,” which amends, by adding to and deleting from, certain sections of the International Building Code, 2003 Edition. If adopted by other local jurisdictions, the document may also be known as the Southern Nevada Amendments to the 2003 International Building Code.] <u>Southern Nevada Amendments to the 2006 International Building Code, which amends, by adding to and deleting from, certain sections of the International Building Code, 2006 Edition.</u> This document is adopted as Part 2 of this Chapter.

(C) The publication entitled the [“International Residential Code for One- and Two-

Family Dwellings, 2003 Edition" (also known as the "International Residential Code, 2003 Edition"), as modified herein, including all chapters contained therein, with the exception of Chapters 12-42, which are not adopted, and including all Appendices other than Appendices A-G, Appendices I-J, and Appendix L, which are not adopted.] "International Residential Code for One- and Two-Family Dwellings, 2006 Edition" (also known as the "International Residential Code, 2006 Edition"), as modified herein, including all chapters and Appendices, except as otherwise specified. This publication, as modified, is designated as Part 3 of this Chapter.

(D) The document entitled ["City of Las Vegas Amendments to the 2003 International Residential Code," which amends, by adding to and deleting from, certain sections of the International Residential Code, 2003 Edition. If adopted by other local jurisdictions, the document may also be known as the Southern Nevada Amendments to the 2003 International Residential Code.] Southern Nevada Amendments to the 2006 International Residential Code, which amends, by adding to and deleting from, certain sections of the International Residential Code, 2006 Edition. This document is adopted as Part 4 of this Chapter.

SECTION 2: The document entitled "Southern Nevada Amendments to the 2006 International Building Code" referred to in Section 1 of this Ordinance, is hereby amended by adding thereto a new Section 421 and a new Subsection 421.1, to read as follows:

**Section 421 Live/Work Units**

**421.1 Live/Work Units.** In accordance with Title 19 of the Las Vegas Municipal Code, live/work units, as defined therein, are permitted in the Live/Work Overlay District. For purposes of addressing fire and life safety issues raised by that type of occupancy, live/work units are permitted in accordance with Title 19, subject to the following limitations:

a. The minimum floor area of a live/work unit shall be 750 square feet.

b. A maximum of 50 percent of the floor area of a live/work unit may be used or arranged for residential purposes such as sleeping, kitchen, bathroom and closet area.

c. No interior wall separating the living portion from the work portion of a unit is required if automatic fire alarm systems are installed throughout the building.

d. Each live/work unit shall be separated from other live/work units or other uses in the

building by a two-hour rated fire wall.

e. Access to live/work units shall be provided only from common access areas (halls or corridors) and shall not be from other live/work units or other uses in the building.

f. Each live/work unit shall be fully sprinklered. Units of less than 1500 square feet may use a NFPA 13R system. Units 1500 square feet or larger require a full NFPA 13 system.

g. An emergency mode of egress directly to the outside (other than through the work portion) shall be provided from the sleeping portion of the live/work unit.

h. Live/work units shall not be used for storage of flammable liquids or hazardous materials, welding or any open flame work.

i. Gas appliances, including gas stoves and water heaters shall be separated from the sleeping areas per applicable codes.

SECTION 3: The documents entitled "Southern Nevada Amendments to the 2006 International Building Code" and "Southern Nevada Amendments to the 2006 International Residential Code," referred to in Section 1 of this Ordinance, are attached hereto.

SECTION 4: The documents entitled "International Building Code, 2003 Edition," "International Residential Code, 2003 Edition," "City of Las Vegas Amendments to the 2003 International Building Code," and "City of Las Vegas Amendments to the 2003 International Residential Code" are hereby repealed.

SECTION 5: If any section, subsection, subdivision, paragraph, sentence, clause or phrase in this ordinance or any part thereof is for any reason held to be unconstitutional or invalid or ineffective by any court of competent jurisdiction, such decision shall not affect the validity or effectiveness of the remaining portions of this ordinance or any part thereof. The City Council of the City of Las Vegas hereby declares that it would have passed each section, subsection, subdivision, paragraph, sentence, clause or phrase thereof irrespective of the fact that any one or more sections, subsections, subdivisions, paragraphs, sentences, clauses or phrases be declared unconstitutional, invalid or ineffective.

SECTION 6: Whenever in this ordinance any act is prohibited or is made or declared to be unlawful or an offense or a misdemeanor, or whenever in this ordinance the doing of any act is

required or the failure to do any act is made or declared to be unlawful or an offense or a misdemeanor, the doing of such prohibited act or the failure to do any such required act shall constitute a misdemeanor and upon conviction thereof, shall be punished by a fine of not more than $1,000.00 or by imprisonment for a term of not more than six months, or by any combination of such fine and imprisonment. Any day of any violation of this ordinance shall constitute a separate offense.

SECTION 7: All ordinances or parts of ordinances or sections, subsections, phrases, sentences, clauses or paragraphs contained in the Municipal Code of the City of Las Vegas, Nevada, 1983 Edition, in conflict herewith are hereby repealed.

PASSED, ADOPTED and APPROVED this _____ day of _____, 2007.

APPROVED:

By _____
OSCAR B. GOODMAN, Mayor

ATTEST:

_____
BARBARA JO RONEMUS, City Clerk

APPROVED AS TO FORM:

Val Steed 1-3-07
Date

The above and foregoing ordinance was first proposed and read by title to the City Council on the _____ day of _____, 2006, and referred to the following committee composed of _____ and _____ for recommendation; thereafter the said committee reported favorably on said ordinance on the _____ day of _____, 2007, which was a _____ meeting of said Council; that at said _____ meeting, the proposed ordinance was read by title to the City Council as amended and adopted by the following vote:

VOTING "AYE": _____

VOTING "NAY": _____

ABSENT: _____

APPROVED:

By _____
OSCAR B. GOODMAN, Mayor

ATTEST:

_____
BARBARA JO RONEMUS, City Clerk

# SOUTHERN NEVADA
# AMENDMENTS
# TO THE
# 2006 INTERNATIONAL BUILDING CODE

**October 12, 2006**


Clark County
4701 W. Russell Rd.
Las Vegas, Nevada 89118
(702) 455-3000
Inspections 455-8040

City of Las Vegas
731 S. 4th Street
Las Vegas, Nevada 89155
(702) 229-6251
Inspections 229-2071

City of North Las Vegas
2240 Civic Center Dr.
North Las Vegas, NV 89030
(702) 633-1577
Inspections 633-1576

Boulder City
401 California Ave.
Boulder City, NV. 89005
(702) 293-9282

City of Mesquite
10 East Mesquite Blvd.
Mesquite, NV, 89027
(702) 346-2835

City of Henderson
240 Water Street
Henderson, NV 89015
(702) 267-3650
Inspections 267-3900

Pahrump Regional Planning District
1210 E. Basin, Suite 1
Pahrump, NV 89060
(775) 751-3773

# PREFACE

This document, prepared by four committees comprised of representative of Southern Nevada jurisdictions and public members, is the recommended amendments to the 2006 International Building Code (IBC) as published by the International Code Council (ICC). The recommended amendments contained herein are not code unless adopted and codified by governmental jurisdictions. These amendments are not intended to prevent the use of any material or method of construction not specifically prescribed herein, provided any alternates have been approved and their use authorized by the Building Official. This document may be copied and used in whole or in part without permission or approval from the organizations listed on the cover page.

# TABLE OF CONTENTS

Section 202 Definitions. ..... 1
Section 303.1 Assembly Group A. ..... 1
Section 304.1 Business Group B. ..... 1
Section 308.2 Group I-1. ..... 2
Section 308.3 Group I-2. ..... 2
Section 310.1 Residential Group R. ..... 2
Section 311.2 Moderate Hazard Storage, Group S-1. ..... 3
Section 403.1 Applicability (High-Rise Buildings). ..... 4
Section 403.2 Automatic Sprinkler System (High-Rise Buildings). ..... 4
Section 403.10.2 Standby Power Loads (High-Rise Buildings). ..... 4
Section 403.11.1 Emergency Power Loads (High-Rise Buildings). ..... 4
Section 403.12 Stairway Door Operation (High-Rise Buildings). ..... 5
Section 403.13 Smokeproof Exit Enclosures (High-Rise Buildings). ..... 5
Section 403.15 Smoke Control. ..... 5
Section 404.1 General (Atriums). ..... 5
Section 404.3 Automatic Sprinkler Protection (Atriums). ..... 5
Section 405.9.1 Standby Power Loads (Underground Buildings). ..... 6
Section 405.10.1 Emergency Power Loads (Underground Buildings). ..... 6
Section 406.1 Private garages and carports. ..... 6
Section 406.1 Private garages and carports. ..... 6
Section 406.2.6.1 Floor Drains (Parking Garages). ..... 7
Section 406.4.2 Ventilation (Enclosed Parking Garages). ..... 7
Section 406.4.2 Ventilation (Enclosed Parking Garages). ..... 7
Section 406.6.3 Ventilation (Repair Garages). ..... 7
Section 406.6.3 Ventilation (Repair Garages). ..... 8
Section 410.3.4 Proscenium Wall (Stages). ..... 8
Section 410.3.5.1 Activation (Stage Proscenium Curtain). ..... 8
Section 410.6 Automatic Sprinkler System (Stages). ..... 8
Section 419.4 Visual Access. ..... 9
Section 420.4 Design and Construction. ..... 9
Section 507.2 Non sprinklered, one story (Unlimited Area Buildings). ..... 9
Section 507.3 Sprinklered, One Story (Unlimited Area Buildings). ..... 9
Section 603.1.2 Piping. ..... 10
Sections 603.1.2 Piping. ..... 10
Table 704.8 Maximum area of exterior wall openings. ..... 11
Section 707.2 Shaft enclosure required. ..... 11
Section 709.4 Continuity. ..... 11
Section 715.4.7 Door Closing. ..... 12
Section 717.5 Combustible materials in concealed spaces in Type I or II construction. ..... 12
Section 803.4.4 Materials. ..... 12
Section 806.1.2 Combustible decorative materials. ..... 13
Section 806.5 Interior trim. ..... 13
Section 903.2.2 Group E (Sprinkler Systems). ..... 13
Section 903.2.5 Group I (Sprinkler Systems). ..... 14

Section 903.3.1.1 NFPA 13 Sprinkler Systems. 14
Section 903.3.1.1.1 Exempt Locations. 14
Section 903.3.1.2 NFPA 13R Sprinkler Systems. 14
Section 903.3.5.2 Secondary Water Supply. 14
Section 903.4.1 Signals. 15
Section 903.6 Fire Pump Rooms. 15
Section 905.3.1 Building Height. 15
Section 907.2.7.1 Occupant notification. 15
Section 907.2.12 High-Rise Buildings (Fire Alarm). 15
Section 907.2.12.1 Automatic Fire Detection (High-Rise Buildings). 16
Section 907.2.12.3 Fire department communication system. 16
Section 907.8.2 High-Rise Buildings (Fire Alarm). 17
Section 907.9.2 Audible alarms. 17
Section 909.5.2 Opening Protection. 17
Section 909.17 System Response Time. 18
Section 909.18.8.3 Reports. 18
Section 909.18.10 Alternative Testing Method. 18
Section 909.20.4 Smokeproof enclosure. 18
Section 909.20.4 Mechanical ventilation alternative. 19
Section 909.20.5 Stair pressurization alternative. 19
Section [F] Section 910.3.2.2 Sprinklered buildings. 19
Table 910.3 Requirements for Draft Curtains and Smoke and Heat Vents. 20
Section 911.1 Features (Fire Command Center). 20
Section 1007.3 Exit stairways. 21
Section 1007.4 Elevators. 21
Section 1008.1.4 Floor Elevation (Doors). 22
Section 1008.1.8.6 Delayed Egress Locks. 22
Section 1008.1.8.7 Stairway Doors. 22
Section 1008.3 Turnstiles. 23
Section 1011.6 Low-Level Exit Signs. 23
Section 1015.1 Exit or exit access doors required. 24
Section 1015.2.2 Three or More Exits. 24
Section 1016.4 Exit Access Travel Distance. 24
Section 1020.1.7 Smokeproof Enclosures. 24
Section 1020.1.7.2 Enclosure Access. 25
Section 1023.2 Use in a Means of Egress (Exterior Exit Ramps/Stairways). 25
Section 1025.6.2.3 Automatic Sprinklers (Smoke-Protected Seating). 25
Section 1102.1 Definitions. 25
Section 1203.1 General (Ventilation). 25
Section 1203.2 Attic Spaces. 25
Sections 1203.4.1.3, 1203.4.1.4, and 1203.4.1.5 – Ventilation Area Required. 26
Section 1203.4.2.1 Bathrooms (Ventilation). 26
Section 1203.6 Mechanical Ventilation. 26
Section 1603.1 General. 28
Table 1607.1 Minimum Uniformly Distributed Live Loads and Minimum Concentrated Live Loads. 28

Section 1607.5 Partition loads. ....28
Section 1610.1 Soil Lateral Loads. ....28
Section 1610.1.1 Basement, foundation and retaining walls in seismic design catagory D, E or F. ....29
Section 1612.3 Establishment of Flood Hazard Areas. ....29
Section 1613.1 Scope. ....29
Section 1613.5.1 Mapped acceleration parameters. ....30
Section 1613.5.5 Site classification for seismic design. ....30
Section 1613.5.5.1 Steps for classifying a site. ....30
Section 1704.1.2 Report Requirements. ....31
Section 1704.4 Concrete Construction. ....31
Section 1704.5 Masonry Construction. ....31
Section 1704.7 Soils. ....32
Table 1704.7 Required Verification And Inspection Of Soils. ....32
Section 1704.15 Amusement and transportation systems special cases: ....33
Section 1802.1 General. ....33
Section 1802.2 Where required. ....33
Section 1802.2.3 Ground-water table. ....34
Section 1802.3.2 Expansive soils. ....34
Section 1802.3.3 Standard 60 pound swell test. ....34
Section 1802.4.2 Minimum Exploration Requirements. ....35
Section 1802.6 Reports. ....35
Section 1803.3 Site Grading Exception. ....37
Section 1803.5 Compacted fill material. ....37
Section 1803.5 Compacted fill material. ....37
Section 1805.1.1 Minimum Distances to Ground Faulting. ....38
Section 1805.2 Depth of footings. ....38
Section 1805.2.4 Minimum Foundation Depth in Expansive Soils. ....38
Table 1805.2.4 Minimum Thickened Edge or Foundation Depth ....39
Section 1805.5 Foundation walls. ....39
Section 1805.5.2.2 Masonry Foundation Walls. ....39
Section 1805.8.2 Slab-On-Ground Foundations. ....40
Table 1805.8.2 Post Tension Slab Criteria. ....40
Section 1806 Retaining Walls. ....41
Section 1910.2 Post Tension Slab Provisions. ....41
Section 2305.3.11 Sill plate size and anchorage in Seismic Design Category D, E or F. ....42
Section 2308.6 Foundation plates or sills. ....42
Section 2308.9.8 Pipes in walls. ....43
Section 2308.12.8 Steel plate washers. ....43
Section 2308.12.9 Anchorage in Seismic Design Category E. ....43
Section 2604.2.3 Area limitation. ....43
Section 2606.7.4 Fire suppression system. ....43
Section 2606.7.5 Electrical lighting fixtures. ....44
Section 2611 light-transmitting plastic interior signs ....44
Section 2611.2 Aggregate area. ....44
Section 2611.3 Separation. ....44

Section 2611.4 Maximum area. ....45
Section 2611.5 Encasement. ....45
Table 2902.1 Minimum Number of Required Plumbing Fixtures. ....45
Section 3002.4 Elevator Car to Accommodate Ambulance Stretcher. ....46
Table 3002.4 Ambulance stretcher sized elevator cars. ....46
Section 3003.1.3 Two or More Elevators. ....47
Section 3109.1 Swimming Pool Enclosures and Safety Devices. ....47
Section 3109.2 Definitions through 3109.5.4 Pool cleaner fittings. ....47
Section 3110 Cabanas. ....47
Section 3401.3 Compliance with Other Codes ....49
Appendices A, B, D, F, G and K. ....49
Appendices C, E, H, and I. ....49
Appendix J Section J101 General. ....50
Appendix J Section J102.1 ....50
Appendix J Section J103 Permits required. ....51
Appendix J Section J103.3 ....51
Appendix J Section J104 Permit applications and submittals. ....51
Appendix J Section J104.2 Grading Plan Requirements ....51
Appendix J Section J104.3 Soils report. ....52
Appendix J Section J105.1 Inspections. ....53
Appendix J Section J105.1.1 Inspections. ....53
Appendix J Section J105.2 Special Inspections. ....55
Appendix J Section J106 Excavations. ....55
Appendix L Fences, walls and retaining walls. ....55

**Section 202 Definitions.**

*Amend Section 202 to include the following definitions:*

**HIGH-RISE BUILDING.** A building with an occupied floor located more than 55 feet (16,764 mm) above the lowest level of fire department vehicle access.

**INTERNATIONAL ELECTRICAL CODE.** The Electrical Code as amended and adopted by the local jurisdiction.

**INTERNATIONAL MECHANICAL CODE.** The Mechanical Code as amended and adopted by the local jurisdiction.

**INTERNATIONAL PLUMBING CODE.** The Plumbing Code as amended and adopted by the local jurisdiction.

**INTERNATIONAL FIRE CODE.** The Fire Code as amended and adopted by the local jurisdiction.

**Section 303.1 Assembly Group A.**

*Amend Section 303.1 Subsection A-2 to read as follows:*

**A-2** Assembly uses intended for food and/or drink consumption including, but not limited to:
Banquet halls
Night clubs
Restaurants
Taverns and bars
Casinos

**Section 304.1 Business Group B.**

*Amend Section 304.1 to read as follows:*

**304.1 Business Group B.** Business Group occupancy includes, among others, the use of a building or structure, or a portion thereof, for office, professional or service-type transactions, including storage of records and accounts. Business occupancies shall include, but not be limited to, the following:

Airport traffic control towers
Animal hospitals, kennels and pounds
Banks
Barber and beauty shops
Car wash
Civic administration
Outpatient clinic and medical offices (where five or less patients in a tenant space are not capable of self preservation)

Dry cleaning and laundries; pick up and delivery stations and self service
Educational occupancies for students above the 12th grade
Electronic data processing
Laboratories; testing and research
Motor vehicle showrooms
Post offices
Print shops
Professional services (architects, attorneys, dentists, physicians, engineers, etc.)
Radio and television stations
Telephone exchanges
Training and skill development not within a school or academic program

**Section 308.2 Group I-1.**

*Amend the first paragraph of Section 308.2 to read as follows, with remainder of section unchanged:*

**308.2 Group I-1.** This occupancy shall include buildings, structures or parts thereof housing more than 16 persons who because of age, mental disability or other reasons, live in a supervised residential environment that provides personal care services. The occupants are capable of responding to an emergency situation without physical assistance from staff. This group shall include, but not be limited to, the following:

**Section 308.3 Group I-2.**

*Amend Section 308.3 to read as follows:*

**308.3 Group I-2.** This occupancy shall include buildings and structures used for medical, surgical, psychiatric, nursing or custodial care of more than five persons who are not capable of self-preservation. This group shall include, but not be limited to the following:

Hospitals
Nursing homes (both intermediate care facilities and skilled nursing facilities)
Mental hospitals
Detoxification facilities

A medical treatment or health care facility such as the above with five or fewer patients shall be classified as a Group B occupancy.

A residential facility such as the above with five or fewer persons shall be classified as Group R-3 or shall comply with the *International Residential Code* in accordance with Section 101.2.

**Section 310.1 Residential Group R.**

*Amend Section 310.1 subsection R-2 to read as follows, with remainder of section unchanged:*

**R-2** Residential occupancies containing sleeping units or more than two dwelling units where the occupants are primarily permanent in nature, including:
Apartment houses
Boarding houses (not transient)
Condominiums (nontransient)
Convents
Dormitories
Fraternities and sororities
Hotels (nontransient)
Monasteries
Motels (nontransient)
Vacation timeshare properties

Congregate living facilities with 16 or fewer occupants are permitted to comply with the construction requirements for Group R-3.

**Section 311.2 Moderate Hazard Storage, Group S-1.**

*Amend Section 311.2 to read as follows:*

**311.2 Moderate-hazard storage, Group S-1.** Buildings occupied for storage uses which are not classified as Group S-2 including, but not limited to, storage of the following:

Aerosols, Levels 2 and 3
Aircraft repair hangar
Bags; cloth, burlap and paper
Bamboos and rattan
Baskets
Belting; canvas and leather
Books and paper in rolls or packs
Boots and shoes
Buttons, including cloth covered, pearl or bone
Cardboard and cardboard boxes
Clothing, woolen wearing apparel
Cordage
Furniture
Furs
Glues, mucilage, pastes and size
Grains
Horns and combs, other than celluloid
Leather
Linoleum
Lumber
Self-Service Storage Facility
Motor vehicle repair garages complying with the maximum allowable quantities of hazardous materials listed in Table 307.1(1) (see Section 406.6)
Photo engraving

Resilient flooring
Silks
Soaps
Sugar
Tires, bulk storage of
Tobacco, cigars, cigarettes and snuff
Upholstery and mattresses
Wax candles

**Section 403.1 Applicability (High-Rise Buildings).**

*Amend the first paragraph of Section 403.1 to read as follows, with the exception and items 1 through 5 unchanged:*

**403.1 Applicability.** The provisions of this section shall apply to buildings with an occupied floor located more than 55 feet (16 764 mm) above the lowest level of fire department vehicle access.

**Section 403.2 Automatic Sprinkler System (High-Rise Buildings).**

*Amend Section 403.2 to read as follows:*

**403.2 Automatic sprinkler system.** Buildings and structures shall be equipped throughout with an automatic sprinkler system in accordance with Section 903.3.1.1 and a secondary water supply where required by Section 903.3.5.2.

> **Exception:** An automatic sprinkler system shall not be required in open parking garages in accordance with Section 406.3.

**Section 403.10.2 Standby Power Loads (High-Rise Buildings).**

*Amend Section 403.10.2 to read as follows:*

**403.10.2 Standby power loads.** The following are classified as standby power loads:
1. Power and lighting for the fire command center required by Section 403.8;
2. Ventilation and automatic fire detection equipment for smokeproof enclosures; and
3. Smoke control systems.

Standby power shall be provided for elevators in accordance with Sections 1007.4 and 3003.

**Section 403.11.1 Emergency Power Loads (High-Rise Buildings).**

*Amend Section 403.11.1 to read as follows:*

**403.11.1 Emergency power loads.** The following are classified as emergency power loads:
1. Exit signs and means of egress illumination required by Chapter 10;

2. Elevator car lighting;
3. Emergency voice/alarm communication systems;
4. Automatic fire detection systems;
5. Fire alarm systems; and
6. Electrically powered fire pumps.

**Section 403.12 Stairway Door Operation (High-Rise Buildings).**

*Amend Section 403.12 to read as follows, with Section 403.12.1 unchanged:*

**403.12 Stairway door operation.** Stairway doors other than the exit discharge doors shall be permitted to be locked from stairway side. Stairway doors that are locked from the stairway side shall be unlocked simultaneously without unlatching upon any of the following: a signal from the fire command center; activation of a fire alarm signal in an area served by the stairway; or failure of the power supply.

**Section 403.13 Smokeproof Exit Enclosures (High-Rise Buildings).**

*Amend Section 403.13 to read as follows:*

**403.13 Smokeproof exit enclosures.** Every required stairway serving floors more than 55 feet (16 764 mm) above the lowest level of fire department vehicle access shall comply with Sections 909.20 and 1020.1.7.

**Section 403.15 Smoke Control.**

*Add new Section 403.15 to read as follows:*

**403.15 Smoke control.** A smoke control system shall be provided in accordance with Section 909.

**Section 404.1 General (Atriums).**

*Amend Section 404.1 to read as follows, with Section 404.1.1 remaining unchanged:*

**404.1 General.** In other than Group H occupancies, and where permitted by Exception 5 in Section 707.2, floor openings meeting the requirements of this section are not required to be protected by a shaft enclosure.

**Section 404.3 Automatic Sprinkler Protection (Atriums).**

*Amend Section 404.3 to read as follows, deleting exceptions #1 and #2:*

**404.3 Automatic sprinkler protection.** An approved automatic sprinkler system shall be installed throughout the entire building.

**Section 405.9.1 Standby Power Loads (Underground Buildings).**

*Amend Section 405.9.1 to read as follows:*

**405.9.1 Standby power loads.** The following loads are classified as standby power loads:

1. Smoke control system.
2. Ventilation and automatic fire detection equipment for smokeproof enclosures.

Standby power shall be provided for elevators in accordance with Section 3003.

**Section 405.10.1 Emergency Power Loads (Underground Buildings).**

*Amend Section 405.10.1 to read as follows:*

**405.10.1 Emergency power loads.** The following loads are classified as emergency power loads:

1. Emergency voice/alarm communication systems.
2. Fire alarm systems.
3. Automatic fire detection systems.
4. Elevator car lighting.
5. Means of egress and exit sign illumination required by Chapter 10.
6. Electrically powered fire pumps.

**Section 406.1 Private garages and carports.**

*Add exception after the last paragraph of Section 406.1.2 to read as follows:*

> **Exception:** Noncombustible carports may be of unlimited area when they are open on all sides, not over twelve feet (3658 mm) in height, and located a minimum of 5 feet (1524 mm) from any property line or assumed property line, measured from the roof edge.

**Section 406.1 Private garages and carports.**

*Amend Section 406.1.4 by adding Items #4 and #5 to read as follows, with the remainder unchanged:*

4. Noncombustible carports do not require exterior wall and opening protection when they are open on all sides, not over twelve feet (3658 mm) in height, and located a minimum of 5 feet (1524 mm) from any property line or assumed property line, as measured from the roof edge.
5. When a Group B, F, M, R, or S occupancy structure and a carport are located on the same property with a minimum separation of ten feet (3048 mm) between the structure and the carport, as measured from the roof edges, exterior wall and opening protection is not required for either structure.

**Section 406.2.6.1 Floor Drains (Parking Garages).**

*Add new Section 406.2.6.1 to read as follows:*

**406.2.6.1 Floor drains.** Where provided, floor drains installed in enclosed parking garages or repair garages shall drain to an approved sand/oil separator.

**Section 406.4.2 Ventilation (Enclosed Parking Garages).**

*Amend Section 406.4.2 to read as follows:*

**406.4.2 Ventilation.** A mechanical ventilation system shall be provided in enclosed parking garages.

> **Exception:** A mechanical ventilation system shall not be required in an enclosed parking garage when openings complying with Section 406.3.3.1 are provided.

**Section 406.4.2 Ventilation (Enclosed Parking Garages).**

*Add new Sections 406.4.2.1, 406.4.2.2, and 406.4.2.3 to read as follows:*

**406.4.2.1 Minimum ventilation.** The mechanical ventilation system shall be capable of producing a ventilation rate of 0.75 cfm per square foot (0.0038 $m^3/s \cdot m^2$) of floor area.

> **Exception:** When approved by the Building Official, the mechanical ventilation system may be designed to exhaust a minimum of 14,000 cfm (6.61 $m^3/s$) for each operating vehicle. Such system shall be based on the anticipated instantaneous movement rate of vehicles, but not less than 2.5 percent of the garage capacity, or one vehicle, whichever is greater.

**406.4.2.2 Intermittent operation.** The mechanical ventilation system shall not be required to operate continuously where approved automatic carbon monoxide sensing devices are provided to operate the system automatically to maintain a maximum average concentration of carbon monoxide of 50 parts per million during any eight-hour period, with a maximum concentration not greater than 200 parts per million for a period not exceeding one hour.

**406.4.2.3 Occupied spaces accessory to public garages.** Connecting offices, waiting rooms, ticket booths and similar uses that are accessory to a public garage shall be supplied with conditioned air and maintained at a positive pressure.

**Section 406.6.3 Ventilation (Repair Garages).**

*Amend Section 406.6.3 to read as follows:*

**406.6.3 Ventilation.** Repair garages shall be mechanically ventilated in accordance with Sections 406.6.3.1 and 406.6.3.2. The ventilation system shall be controlled at the entrance to the garage.

**Section 406.6.3 Ventilation (Repair Garages).**

*Add new Sections 406.6.3.1 and 406.6.3.2 to read as follows:*

**406.6.3.1 Minimum ventilation.** The mechanical ventilation system shall be capable of producing a ventilation rate of 1.5 cfm per square foot (0.0076 $m^3/s \cdot m^2$) of floor area. Each engine repair stall shall be equipped with an exhaust pipe extension duct, extending to the outside of the building, which, if over 10 feet (3048 mm) in length, shall mechanically exhaust 300 cfm (0.142 $m^3/s$).

**406.6.3.2 Occupied spaces accessory to repair garages.** Connecting offices, waiting rooms and similar uses that are accessory to a repair garage shall be supplied with conditioned air and maintained at a positive pressure.

**Section 410.3.4 Proscenium Wall (Stages).**

*Amend Section 410.3.4 to read as follows:*

**410.3.4 Proscenium wall.** Where the stage height is greater than 50 feet (15 240 mm), all portions of the stage shall be completely separated from the seating areas by a proscenium wall with not less than a 2-hour fire-resistance rating extending continuously from the foundation to the roof.

> **Exception:** Where a stage is located in a building of Type I construction, the proscenium wall is permitted to extend continuously from the 2-hour fire-resistance-rated floor slab of the space containing the stage to the roof or floor deck above.

**Section 410.3.5.1 Activation (Stage Proscenium Curtain).**

*Amend Section 410.3.5.1 to read as follows:*

**410.3.5.1 Activation.** The curtain shall be activated by signal of water flow from any sprinkler system covering the stage as required by Section 410.6, by rate-of-rise heat detection installed in accordance with Section 907.10 operating at a rate of temperature rise of 15 to 20° F per minute (8 to 11° C per minute), and by an auxiliary manual control.

**Section 410.6 Automatic Sprinkler System (Stages).**

*Amend Section 410.6 to read as follows, deleting Exceptions #1, #2, and #3:*

**410.6 Automatic sprinkler system.** Stages shall be equipped with an automatic fire-extinguishing system in accordance with Chapter 9. Sprinklers shall be installed under the roof

and gridiron and under all catwalks and galleries over the stage. Sprinklers shall be installed in dressing rooms, performer lounges, shops and storerooms accessory to such stages.

**Section 419.4 Visual Access.**

*Add Section 419.4 to read as follows:*

**419.4 Visual access**. All front entrance doors of individual units in motels, hotels, apartment houses, condominiums, and vacation timeshare properties shall contain a means to provide occupants of the unit with visual access through the door.

**Section 420.4 Design and Construction.**

*Amend Section 420.4 to read as follows, with Sections 420.4.1 through 420.4.2 remaining unchanged:*

**420.4 Design and construction.** Hydrogen cutoff rooms shall be classified with respect to occupancy in accordance with Section 302.1 and separated from other areas of the building by not less than 1-hour fire barriers or as required by Section 508.2 or 508.3 as applicable. Rooms shall be provided with at least one automatic sprinkler to provide equipment and container cooling in case of fire.

**Section 507.2 Non sprinklered, one story (Unlimited Area Buildings).**

*Amend Section 507.2 to read as follows:*

**507.2 Group F-2 or S-2, one story.** The area of a one-story, Group F-2 or S-2 building shall not be limited when the building is surrounded and adjoined by public ways or yards not less than 60 feet (18 288 mm) in width and the building is provided with an automatic sprinkler system throughout when required by Section 903.2 or the Fire Code.

**Section 507.3 Sprinklered, One Story (Unlimited Area Buildings).**

*Amend Section 507.3 to read as follows:*

**507.3 Sprinklered, one story.** The area of a one-story, Group B, F, M or S building or a one-story Group A-4 building, of other than Type V construction, shall not be limited when the building is provided with an automatic sprinkler system throughout in accordance with Section 903.3.1.1 and is surrounded and adjoined by public ways or yards not less than 60 feet (18 288 mm) in width.

**Exceptions:**

1. Buildings and structures of Type I and II construction for rack storage facilities that do not have access by the public shall not be limited in height, provided that such buildings conform to the requirements of Sections 507.2 and 903.3.1.1 and NFPA 230.

2. Group A-1 and A-2 occupancies of other than Type V construction shall be permitted, provided:
   - 2.1 All assembly occupancies are separated from other spaces as required for separated uses in Section 508.3.3.4 with no reduction allowed in the fire-resistance rating of the separation based upon the installation of an automatic sprinkler system;
   - 2.2 Each Group A occupancy shall not exceed the maximum allowable area permitted in Section 503.1; and
   - 2.3 All required exits shall discharge directly to the exterior.

**Section 603.1.2 Piping.**

*Amend Section 603.1.2 to read as follows:*

**603.1.2 Piping.** The use of combustible piping materials shall be permitted when installed in accordance with the limitations of the *International Mechanical Code* and the *International Plumbing Code* and the following:

**Sections 603.1.2 Piping.**

*Add Sections 603.1.2.1 through 603.1.2.5 to read as follows:*

**603.1.2.1 Equipment rooms.** Combustible piping shall be permitted to be installed in an equipment room that is enclosed by 2-hour fire-resistance rated construction and protected throughout by automatic sprinklers. The combustible piping shall be permitted to be extended from the equipment room to other rooms provided the piping is encased in an approved, dedicated 2-hour fire-resistance rated assembly. Where such combustible piping penetrates a fire-resistance rated wall and/or floor/ceiling assembly, the penetration shall be protected by a through-penetration firestop system that is listed for the specific piping material and that has F and T ratings not less than the required fire-resistance rating of the penetrated assembly. The combustible piping shall not penetrate more than a single floor.

**603.1.2.2 Chemical waste systems.** Combustible piping shall be permitted to be installed for chemical waste and vent systems when the chemical waste would otherwise react with noncombustible piping. Combustible piping serving such systems shall be protected as required in Section 603.1.2.1.

**603.1.2.3 Medical water systems.** Combustible piping shall be permitted to be installed for purified water systems that are used in conjunction with medical treatment systems, such as dialysis. Combustible piping serving such systems shall be protected as required in Section 603.1.2.1.

**603.1.2.4 Bars and soda fountains.** Combustible distribution/process piping serving bars and soda fountains shall be permitted to be installed below a fire-resistance rated slab-on-grade or sleeved through a fire-resistance rated floor/ceiling assembly.

**603.1.2.5 Fire sprinkler systems.** CPVC piping that is specifically listed and labeled for fire protection use shall be permitted to be installed for fire sprinkler system piping provided that it is installed in accordance with its listing, the manufacturer's installation requirements, and the *International Building Code*.

**Table 704.8 Maximum area of exterior wall openings.**

*Amend Table 704.8 as follows, all footnotes remain unchanged:*

**TABLE 704.8**
**MAXIMUM AREA OF EXTERIOR WALL OPENINGS [a]**

| CLASSIFICATION OF OPENINGS | FIRE SEPARATION DISTANCE (feet) | | | | | | | |
|---|---|---|---|---|---|---|---|---|
| | 0 to 3[f, j] | Greater than 3 to 5[c,g] | Greater than 5 to 10[c,e,g,h] | Greater than 10 to 15[d,e,g] | Greater than 15 to 20[d,g] | Greater than 20 to 25[d,g] | Greater than 25 to 30[d,g] | Greater than 30 |
| Unprotected | Not Permitted | Not Permitted[c] | 10%[i] | 15%[i] | 25%[i] | 45%[i] | 70%[i] | No Limit[b] |
| Protected | Not Permitted | Not Permitted[c] | 25% | 45% | 75% | No Limit[b] | No Limit[b] | No Limit[b] |

*Footnotes remain unchanged.*

**Section 707.2 Shaft enclosure required.**

*Amend Exception #8 of Section 707.2 to read as follows:*

8. A shaft enclosure is not required for automobile ramps, or exhaust or supply ducts that are dedicated to the parking garage ventilation system and are separated from other building shafts by not less than 2-hour fire-resistance-rated construction, in open and enclosed parking garages constructed in accordance with Sections 406.3 and 406.4, respectively.

**Section 709.4 Continuity.**

*Amend Section 709.4 to read as follows:*

**709.4 Continuity.** Smoke barriers shall form an effective membrane continuous from the top of the foundation or floor/ceiling assembly below to the underside of the floor or roof sheathing, deck or slab above, including continuity through concealed spaces, such as those found above suspended ceilings, and including interstitial structural and mechanical spaces. The supporting construction shall be protected to afford the required fire-resistance rating of the wall or floor supported in buildings of other than Type IIB, IIIB, or VB construction.

> **Exception:** Smoke-barrier walls are not required in interstitial spaces where such spaces are designed and constructed with ceilings that provide resistance to the passage of fire and smoke equivalent to that provided by the smoke-barrier walls.

**Section 715.4.7 Door Closing.**

*Amend Section 715.4.7 to read as follows:*

**Section 715.4.7 Door closing**. Fire doors in fire walls shall be automatic closing in accordance with this section. Fire doors in other than fire walls shall be self-closing or automatic-closing in accordance with this section.

**Exceptions:**

1. Fire doors located in common walls separating sleeping units in Group R-1, and between dwelling units of transient nature in Group R-2, shall be permitted without automatic- or self-closing devices.
2. The elevator car doors and the associated hoistway enclosure doors at the floor level designated for recall in accordance with Section 3003.2 shall be permitted to remain open during Phase 1 emergency recall operation.

**Section 717.5 Combustible materials in concealed spaces in Type I or II construction.**

*Amend Section 717.5 to read as follows:*

**717.5 Combustible materials in concealed spaces in Type I or II construction.** Combustible materials shall not be permitted in concealed spaces of buildings of Type I or II construction.

**Exceptions:**

1. Combustible materials in accordance with Section 603.

2. Class A interior finish materials classified in accordance with Section 803 where the concealed space is protected with fire sprinklers as required by the Fire Code when fire sprinklers are required in the building by another section in this code.

3. Combustible insulation and covering on pipe and tubing, installed in concealed spaces other than plenums, complying with Section 719.7.

4. CPVC fire sprinkler system piping listed and labeled for fire protection use. Piping shall have a peak optical density not greater than 0.50, an average optical density of not greater than 0.15, and a flame spread of not greater than 5 feet when tested in accordance with UL 1887.

**Section 803.4.4 Materials.**

*Amend Exception 1 of Section 803.4.4 to read as follows,with the remainder of the section remaining unchanged:*

**Exceptions:**

1. Non-combustible materials.

**Section 806.1.2 Combustible decorative materials.**

*Amend Sections 806.1.2 to read as follows:*

**806.1.2 Combustible decorative materials.** The permissible amount of decorative materials meeting the flame propagation performance criteria of NFPA 701 shall not exceed 10 percent of the specific wall or ceiling area to which it is attached.

Exceptions:

1. In auditoriums in Group A, the permissible amount of decorative material meeting the flame propagation performance criteria of NFPA 701 shall not exceed 75 percent of the aggregate wall area where the building is equipped throughout with n automatic sprinkler system in accordance with Section 903.3.1.1 and where the material is installed in accordance with Section 803.4.

2. The amount of fabric partitions suspended from the ceiling and not supported by the floor in Group B and M occupancies shall not be limited.

**Section 806.5 Interior trim.**

*Amend Sections 806.5 to read as follows:*

**806.5 Interior trim.** Material, other than foam plastic used as interior trim shall have a minimum Class C flame spread and smoke-developed index when tested in accordance with ASTM E 84, as described in Section 803.1. combustible trim, excluding handrails and guardrails, shall not exceed 10 percent of the specific wall or ceiling area to which it is attached.

**Section 903.2.2 Group E (Sprinkler Systems).**

Amend Section 903.2.2 to read as follows:

**903.2.2 Group E.** An automatic sprinkler system shall be provided for Group E occupancies where one or more of the following conditions exists:

1. The Group E fire areas have an occupant load of 50 or more.
2. Any portion of the Group E fire areas is below the level of exit discharge.
3. Rooms used for kindergarten, first or second-grade pupils or for child care purposes, are located above or below the first story.
4. Daycare facilities when there is occupancy from 12:00 a.m. to 6:00 a.m.

**Exception:** An automatic sprinkler system is not required in any fire area or area below the level of exit discharge where every classroom throughout the building has at least one exterior exit door at ground level.

**Section 903.2.5 Group I (Sprinkler Systems).**

*Amend Section 903.2.5 to read as follows, deleting the exception:*

**903.2.5 Group I.** An automatic sprinkler system shall be provided throughout buildings with a Group I fire area.

**Section 903.3.1.1 NFPA 13 Sprinkler Systems.**

*Amend Section 903.3.1.1 to read as follows:*

**903.3.1.1 NFPA 13 sprinkler systems.** Where the provisions of this code require that a building or portion thereof be equipped throughout with an automatic sprinkler system in accordance with this section, sprinklers shall be installed throughout in accordance with NFPA 13 except as provided in Section 903.3.1.1.1.

**Section 903.3.1.1.1 Exempt Locations.**

*Amend Section 903.3.1.1.1 to read as follows:*

**Section 903.3.1.1.1 Exempt Locations**. Automatic sprinklers shall not be required in the following rooms or areas where such rooms or areas are protected with an approved automatic fire extinguishing system, in accordance with Section 904. Sprinklers shall not be omitted from any room merely because it is damp, of fire-resistance-rated construction or contains electrical equipment.

1. Any room where the application of water, or flame and water, constitutes a serious life or fire hazard.
2. Any room or space where sprinklers are considered undesirable because of the nature of the contents, when approved by the fire code official.
3. Generator and transformer rooms separated from the remainder of the building by walls and floor/ceiling assemblies having a fire-resistance rating of not less than 2 hours.

**Section 903.3.1.2 NFPA 13R Sprinkler Systems.**

*Amend Section 903.3.1.2 to read as follows, with Section 903.3.1.2.1 remaining unchanged:*

**903.3.1.2 NFPA 13R sprinkler systems.** Where allowed in buildings of Group R-1 or R-2, up to and including two stories in height, automatic sprinklers systems are permitted to be installed throughout in accordance with NFPA 13R.

**Section 903.3.5.2 Secondary Water Supply.**

*Amend Section 903.3.5.2 to read as follows:*

**903.3.5.2 Secondary water supply.** A secondary on-site water supply equal to the hydraulically calculated sprinkler demand, including the hose stream requirement, but not less than 15,000 gallons, shall be provided for high-rise buildings. The secondary water supply shall have a duration of not less than 30 minutes as determined by the occupancy hazard classification in accordance with NFPA 13.

**Exception:** Existing buildings.

**Section 903.4.1 Signals.**

*Amend exception #2 of Section 903.4.1 to read as follows:*

2. Backflow prevention devices located at the municipal water supply connection are not required to be monitored when either locked in the open position, or are located within a underground vault or a protective enclosure (hot box) provided by the water purveyor.

**Section 903.6 Fire Pump Rooms.**

*Add a new Section 903.6 to read as follows:*

**903.6 Fire pump rooms.** Where fire pumps are required to provide the required sprinkler and/or standpipe system demand, the fire pumps shall be located in a dedicated room enclosed by fire barriers that have a fire-resistance rating of not less than 2 hours. Fire pump rooms shall be provided with permanent lighting and permanent means to maintain the temperature in the room above 40°F (5°C. All fire pump rooms shall be provided with a floor drain.

**Section 905.3.1 Building Height.**

*Amend Section 905.3.1 to read as follows, including deleting all exceptions:*

**Section 905.3.1 Building Height.** Approved Class I standpipe systems shall be installed throughout buildings where the floor level of the highest story is located more than 30 feet (9144mm) above the lowest level of the fire department vehicle access, or where the floor level of the lowest story is located more than 30 feet (9144mm) below the highest level of fire department vehicle access.

**Section 907.2.7.1 Occupant notification.**

*Delete Section 907.2.7.1 without substitution.*

**Section 907.2.12 High-Rise Buildings (Fire Alarm).**

*Amend Section 907.2.12 to read as follows:*

**907.2.12 High-rise buildings.** Buildings with a floor used for human occupancy located more than 55 feet (16 764 mm) above the lowest level of fire department vehicle access shall be provided with an automatic fire alarm system and an emergency voice/alarm communication system in accordance with Section 907.2.12.2.

**Exceptions:**

1. Airport traffic control towers in accordance with Sections 412 and 907.2.22.
2. Open parking garages in accordance with Section 406.3.
3. Low-hazard special occupancies in accordance with Section 503.1.1.

**Section 907.2.12.1 Automatic Fire Detection (High-Rise Buildings).**

*Amend Section 907.2.12.1 to read as follows:*

**907.2.12.1 Automatic fire detection.** Smoke detection shall be provided in accordance with this section. Smoke detectors shall be connected to an automatic fire alarm system. The activation of any detector required by this section shall operate the emergency voice/alarm communication system. Smoke detectors shall be located as follows:

1. In each room containing oil filled transformers, each room containing dry-type transformers with a rating in excess of 112.5 kVA, each telephone equipment or similar type electronics room, elevator machine rooms and in elevator lobbies.
2. In the main return air and exhaust air plenum of each air-conditioning system having a capacity greater than 2,000 cubic feet per minute (cfm) (0.94 $m^3/s$). Such detectors shall be located in a serviceable area downstream of the last duct inlet.
3. At each connection to a vertical duct or riser serving two or more stories from a return air duct or plenum of an air-conditioning system. In Group R-1 and R-2 occupancies a listed smoke detector is allowed to be used in each return air riser carrying not more than 5,000 cfm (2.4 $m^3/s$) and serving not more than 10 air inlet openings.

**Exception:** Where mechanical and electrical rooms are provided with alternative protection in accordance with Section 903.1.1, smoke detectors shall also be provided in these rooms in accordance with this Section.

**Section 907.2.12.3 Fire department communication system.**

*Amend Section 907.2.12.3 to read as follows, with the exception deleted:*

**Section 907.2.12.3 Fire department communication system**. Approved fire department communication systems designed and installed in accordance with the Fire Code shall be provided for fire department use. It shall operate between a fire command center complying with Section 911 and elevators, elevator lobbies, emergency and standby power rooms, fire pump rooms, areas of refuge and inside enclosed exit stairways. The fire department communication device shall be provided at each floor level within the enclosed stairway.

**Section 907.8.2 High-Rise Buildings (Fire Alarm).**

*Amend Section 907.8.2 to read as follows:*

**907.8.2 High-rise buildings.** In buildings with a floor used for human occupancy that is located more than 55 feet (16 764 mm) above the lowest level of fire department vehicle access, a separate zone by floor shall be provided for all of the following types of alarm-initiating devices where provided:

1. Smoke detectors.
2. Sprinkler water-flow devices.
3. Manual fire alarm devices.
4. Other approved types of automatic fire detection devices or suppression systems.

**Section 907.9.2 Audible alarms.**

*Section 907.9.2 is amended to read as follows.*

**907.9.2 Audible alarms.** Audible alarm notification appliances shall be provided and shall sound a distinctive sound that is not to be used for any purpose other than that of a fire alarm. The audible alarm notification appliances shall provide a sound pressure level of 15 decibels (dBA) above the average ambient sound level or 5 dBA above the maximum sound level having a duration of at least 60 seconds, whichever is greater, in every occupied space within the building. The minimum sound pressure levels shall be: 80 dBA in occupancies in Groups R and I-1; 90 dBA in mechanical equipment rooms and 80 dBA in other occupancies. The maximum sound pressure level for audible alarm notification appliances shall be 120 dBA at the minimum hearing distance from the audible appliance. Where the average ambient noise is greater than 105 dBA, visible alarm notification appliances shall be provided in accordance with NFPA 72 and audible alarm notification appliances shall not be required.

**Exception:** Visible alarm notification appliances shall be allowed in lieu of audible alarm notification appliances in critical-care areas of Group I-2 occupancies.

**Section 909.5.2 Opening Protection.**

*Add exception #6 to Section 909.5.2 to read as follows:*

6. Passive smoke control systems shall be permitted to be self-closing in the following locations:
   - 6.1. Guest Rooms
   - 6.2. Individual dwelling units
   - 6.3. Mechanical rooms
   - 6.4. Elevator machine rooms
   - 6.5. Electrical rooms used exclusively for that purpose

6.6. Doors typically maintained in a closed position as approved by the building official.

**Section 909.17 System Response Time.**

*Amend Section 909.17 to read:*

**909.17 System response time.** Smoke-control system activation shall be initiated immediately after receipt of an appropriate automatic or manual activation command. Smoke control systems shall activate individual components (such as dampers and fans) in the sequence necessary to prevent physical damage to the fans, dampers, ducts and other equipment. For purposes of smoke control, the fire-fighter's smoke control panel response time shall be the same for automatic or manual smoke control action initiated from any other building control point. The total response time, including that necessary for detection, shut-down of operating equipment and smoke control system startup, shall allow for full operational mode to be achieved before the conditions in the space exceed the design smoke condition. Upon receipt of an alarm condition at the fire alarm control panel, fans, dampers and automatic doors shall have achieved their expected operating state and confirmation of proper operation shall be indicated at the smoke control panel within 60 seconds. Verification shall be reported in the required final report.

**Section 909.18.8.3 Reports.**

*Amend Section 909.18.8.3 to read as follows, with Section 909.18.8.3.1 remaining unchanged:*

**[F] 909.18.8.3 Reports.** A complete report of testing shall be prepared by the special inspector or special inspection agency. The report shall include identification of all devices by manufacturer, nameplate data, design values, measured values and identification tag or mark. The report shall be reviewed by the responsible registered design professional and, when satisfied that the design intent has been achieved, the responsible registered design professional shall seal, sign and date the report with a statement as follows:

> I have reviewed this report and by personal knowledge and on-site observation certify that the smoke-control system is in substantial compliance with the design intent, and to the best of my understanding complies with requirements of the code.

**Section 909.18.10 Alternative Testing Method.**

*Add a new Section 909.18.10 to read:*

**909.18.10 Alternative testing method.** When required by the building official, theatrical smoke or other approved tracer gases shall be used during final acceptance testing to visually verify air movement.

**Section 909.20 Smokeproof enclosure.**

*Amend Section 909.20 to read as follows, with Sections 909.20.1 through 909.20.3.3 remaining unchanged:*

**909.20 Smokeproof enclosures.** Where required by Section 1020.1.7, a smokeproof enclosure shall be constructed in accordance with this section. A smokeproof enclosure shall consist of an enclosed interior exit stairway that conforms to Section 1020.1 and an open exterior balcony, ventilated vestibule, or pressurized stair and vestibule meeting the requirements of this section. Where access to the roof is required by the *International Fire Code*, such access shall be from the smokeproof enclosure where a smokeproof enclosure is required.

**Section 909.20.4 Mechanical ventilation alternative.**

*Replace Sections 909.20.4 through 909.20.4.4 with the following new Sections 909.20.4 through 909.20.4.3, to read as follows:*

**909.20.4 Pressurized stair and vestibule alternative.** The provisions of Sections 909.20.4.1 through 909.20.4.4 shall apply to smokeproof enclosures using a pressurized stair and pressurized entrance vestibule.

**909.20.4.1 Vestibule doors.** The door assembly from the building into the vestibule shall be a fire door assembly complying with Section 715.4. The door assembly from the vestibule to the stairway shall not have less than a 20-minute fire protection rating and meet the requirements for a smoke door assembly in accordance with Section 715.4.3. The door shall be installed in accordance with NFPA 105.

**909.20.4.2 Pressure difference**. The stair enclosure shall be pressurized to a minimum of 0.05 inch of water gage (12.44 Pa) positive pressure relative to the vestibule with all stairway doors closed under the maximum anticipated stack pressures. The vestibule with doors closed shall have a minimum of 0.05 inch of water gage (12.44 Pa) positive pressure relative to the fire floor. The pressure difference across doors shall not exceed 30 lbs (133-N) maximum force to begin opening the door.

**909.20.4.3 Dampered relief opening.** A controlled relief vent capable of discharging a minimum of 2,500 cfm (1180 L/s) of air at the design pressure difference shall be located in the upper portion of the pressurized exit enclosure.

**Section 909.20.5 Stair pressurization alternative.**

*Delete Section 909.20.5 without replacement.*

**Section [F] Section 910.3.2.2 Sprinklered buildings.**

*Amend Section 910.3.2.2 to read as follows:*

**[F] Section 910.3.2.2 Sprinklered buildings.** Where installed in buildings provided with an approved automatic sprinkler system, smoke and heat vents may operate automatically by

actuation of a heat-responsive device rated at a minimum of 350°F (177°C). Smoke and heat vents shall also be designed for manual operation.

## Table 910.3 Requirements for Draft Curtains and Smoke and Heat Vents.

*Amend Table 910.3 to read as follows:*

**[F] TABLE 910.3**
**REQUIREMENTS FOR DRAFT CURTAINS AND SMOKE AND HEAT VENTS[a]**

| | NON-SPRINKLERED | | | | | | SPRINKLERED | | | |
|---|---|---|---|---|---|---|---|---|---|---|
| OCCUPANCY GROUP AND COMMODITY CLASSIFICATION | DESIGNATED STORAGE HEIGHT (FEET) | MINIMUM DRAFT CURTAIN DEPTH (FEET) | MAXIMUM AREA FORMED BY DRAFT CURTAINS (SQUARE FEET) | VENT-AREA-TO-FLOOR-AREA RATIO[c] | MAXIMUM SPACING OF VENT CENTERS (FEET) | MAXIMUM DISTANCE TO VENTS FROM WALL OR DRAFT CURTAINS[b] (FEET) | DRAFT CURTAINS | VENT-AREA-TO-FLOOR - AREA RATIO[c] | MAXIMUM SPACING OF VENT CENTERS (FEET) | MAXIMUM DISTANCE TO VENTS FROM WALL[b] (FEET) |
| Group F-1 and S-1 | - | 0.2 X H[d] BUT ≥ 4 | 50,000 | 1:100 | 120 | 60 | NOT PERMITTED | 1:100 | 100 | 50 |
| High-Piled Storage (see Section 910.2.3) I-IV (Option 1) | ≤ 20 | 6 | 10,000 | 1:100 | 100 | 60 | | | | |
| | >20 ≤ 40 | 6 | 8,000 | 1:75 | 100 | 55 | | | | |
| High-Piled Storage (see Section 910.2.3) I-IV (Option 2) | ≤ 20 | 4 | 3,000 | 1:75 | 100 | 55 | | | | |
| | >20 ≤ 40 | 4 | 3,000 | 1:50 | 100 | 50 | | | | |
| High-piled Storage (see Section 910.2.3) High hazard (Option 1) | ≤ 20 | 6 | 6,000 | 1:50 | 100 | 50 | | | | |
| | >20 ≤ 30 | 6 | 6,000 | 1:40 | 90 | 45 | | | | |
| High-piled Storage (see Section 910.2.3) High hazard (Option 2) | ≤ 20 | 4 | 4,000 | 1:50 | 100 | 50 | | | | |
| | >20 ≤ 30 | 4 | 2,000 | 1:30 | 75 | 40 | | | | |

For SI: 1 foot = 304.8 mm, 1 square foot = 0.0929 $m^2$.

a. Requirements for rack storage heights in excess of those indicated shall be in accordance with the Fire Code. For solid-piled storage heights in excess of those indicated, an approved engineering design shall be used.

b. The distance specified is the maximum distance from any vent in a particular draft curtained area to walls or draft curtains which form the perimeter of the draft curtained area.

c. Where draft curtains are not required, the vent-area-to-floor-area ration shall be calculated based on a minimum draft curtain depth of 6 feet (Option 1).

d. "H" is the height of the vent, in feet, above the floor.

## Section 911.1 Features (Fire Command Center).

*Amend Section 911.1 to read as follows:*

**911.1 Features.** Where required by other sections of this code, a fire command center for fire department operations shall be provided. The location and accessibility of the fire command center shall be approved by the fire department. The fire command center shall have an access door opening to the exterior of the building and be separated from the remainder of the building by not less than a 2-hour fire barrier constructed in accordance with Section 706 or horizontal assembly constructed in accordance with Section 711, or both. The room shall have a minimum size equal to 0.015 percent of the total building area of the facility served or 150 square feet (14 $m^2$), whichever is greater, with a minimum dimension, in feet, of 0.8 times the square root of the room area (in square feet). A layout of the fire command center and all features required by the section to be contained therein shall be submitted to the fire department for approval prior to installation. The fire command center shall comply with NFPA 72 and shall contain the following features:

1. The emergency voice/alarm communication system unit.
2. The fire department communications unit.
3. Fire detection and alarm system annunciator unit.
4. Annunciator unit visually indicating the location of the elevators and whether they are operational.
5. Status indicators and controls for air-handling systems.
6. The fire-fighter's control panel required by Section 909.16 for smoke control systems installed in the building.
7. Controls for unlocking stairway doors simultaneously.
8. Sprinkler valve and water-flow detector display panels.
9. Emergency and standby power status indicators.
10. A telephone for fire department use with direct access to the public telephone system.
11. Fire pump status indicators.
12. Current, approved building plans including the Master Exit Plans, approved fire protection system shop drawings, approved Smoke Control Diagrams, the approved Fire Protection Report, fire/emergency preplans for the facility, and manufacturer's operation manuals for all fire protection and life safety systems.
13. A minimum 3-feet by 7-feet worktable capable of holding building plans in an open position.
14. Generator supervision devices, manual start and transfer features.
15. Public address system, where specifically required by other sections of this code.
16. A minimum 3-feet by 4-feet dry-erase marker board, with dry erase marker and an eraser attached.
17. Separate shunt trip switches for normal and emergency power.

**Section 1007.3 Exit stairways.**

*Add exception #6 to Section 1007.3 to read as follows:*

6. Areas of refuge are not required at exit stairways in buildings or facilities that are equipped throughout with an automatic sprinkler system installed in accordance with Section 903.3.1.1 or 903.3.1.2.

**Section 1007.4 Elevators.**

*Add exception #2 to Section 1007.4, so that the exceptions read as follows:*

**Exceptions**:

1. Elevators are not required to be accessed from an area of refuge or horizontal exit in open parking garages.
2. Elevators are not required to be accessed from an area of refuge or horizontal exit in buildings or facilities that are equipped throughout with an automatic sprinkler system installed in accordance with Section 903.3.1.1 or 903.3.1.2.

**Section 1008.1.4 Floor Elevation (Doors).**

*Add new Exception #6 to Section 1008.1.4 to read as follows, with the remainder of the section unchanged:*

**Exceptions:**

6. A single step with a maximum height of 7 inches (178 mm) is permitted for doors serving building equipment rooms that are not normally occupied and are not required to be accessible by Chapter 11.

**Section 1008.1.8.6 Delayed Egress Locks.**

*Amend Section 1008.1.8.6 to read as follows:*

**1008.1.8.6 Delayed egress locks.** Approved, listed, delayed egress locks shall be permitted to be installed on doors serving any occupancy except Group A, E and H occupancies in buildings which are equipped throughout with an automatic sprinkler system in accordance with Section 903.3.1.1 and an approved automatic smoke detection system installed in accordance with Section 907, provided that the doors unlock in accordance with Items 1 through 6 below. A building occupant shall not be required to pass through more than one door equipped with a delayed egress lock before entering an exit.

1. The doors unlock upon actuation of the automatic sprinkler system or automatic fire detection system.
2. The door unlock upon loss of power controlling the lock or lock mechanism.
3. The door locks shall have the capability of being unlocked by a signal from the fire command center.
4. The initiation of an irreversible process which will release the latch in not more that 15 seconds when a force of not more that 15 pounds (67 N) is applied for 1 second to the release device. Initiation of the irreversible process shall activate an audible signal in the vicinity of the door. Once the door lock has been released by the application of force to the releasing device, relocking shall be by manual means only.
5. A sign shall be provided on the door located above and within 12 inches (305 mm) of the release device reading: PUSH UNTIL ALARM SOUNDS. DOOR CAN BE OPENED IN 15 SECONDS.
6. Emergency lighting shall be provided at the door.

**Section 1008.1.8.7 Stairway Doors.**

*Amend Section 1008.1.8.7 to read as follows:*

**1008.1.8.7 Stairway doors.** Interior stairway means of egress doors shall be operable from both sides without the use of a key or special knowledge or effort.

**Exceptions:**

1. Stairway discharge doors shall be openable from the egress side and shall only be locked from the opposite side.
2. This section shall not apply to doors arranged in accordance with Section 403.12.
3. In stairways serving buildings other than high-rise buildings, doors are permitted to be locked from the side opposite the egress side, provided they are openable from the egress side. Except for exit discharge doors, the stairway doors shall be automatically unlocked simultaneously without unlatching upon any of the following: a signal from the fire command center, if present, or a signal by emergency personnel from an approved location inside the building; activation of a fire alarm system or a fire sprinkler system in an area served by the stairway; or failure of the power supply.

**Section 1008.3 Turnstiles.**

*Amend Section 1008.3 to read as follows:*

**1008.3 Turnstiles.** Turnstiles or similar devices that restrict travel to one direction shall not be placed so as to obstruct any required means of egress.

**Exception:** Each turnstile or similar device shall be credited with no more than a 50-person capacity where all of the following provisions are met:

1. Each device shall turn free in the direction of egress travel when primary power is lost.
2. Such devices are not given credit for more than 50 percent of the required egress capacity.
3. Each device is not more than 39 inches (991 mm) high.
4. Each device has at least 16.5 inches (419 mm) clear width at and below a height of 39 inches (991 mm) and at least 22 inches (559 mm) clear width at heights above 39 inches (991 mm).
5. Buildings are protected throughout by an approved automatic sprinkler system or an approved automatic smoke detection system.
6. Activation of the building automatic sprinkler or fire detection system shall automatically unlock the turnstile. The turnstile shall remain unlocked until the fire protection system is reset.

Where located as part of an accessible route, turnstiles shall have at least 36 inches (914 mm) clear at and below a height of 34 inches (864 mm), at least 32 inches (813 clear) width between 34 inches (864 mm) and 80 inches (2032 mm) and shall consist of a mechanism other than a revolving device.

**Section 1011.6 Low-Level Exit Signs.**

*Add Section 1011.6 to read as follows:*

**1011.6 Low-level exit signs.** Where exit signs are required by Section 1011.1, additional approved low-level exit signs that are internally or externally illuminated shall be provided in all corridors serving guest rooms in Group R, Division 1 Occupancies. The bottom of each such

sign shall not be less than 6 inches (152 mm) nor more that 8 inches (203mm) above the floor level and shall indicate the path of exit travel. For exit and exit-access doors, the sign shall be on the door or adjacent to the door, with the closest edge of the sign within 4 inches (102 mm) of the doorframe.

**Section 1015.1 Exit or exit access doors required.**

*Add exception #2 to Section 1015.1, so that the exceptions read as follows:*

**Exceptions**:

1. Group I-2 occupancies shall comply with Section 1014.2.2.
2. In Groups R-2 and R-3 occupancies, one means of egress is permitted within and from individual dwelling units with a maximum occupant load of 20 where the dwelling unit is equipped throughout with an automatic sprinkler system in accordance with Sections 903.3.1.1 or 903.3.1.2.

**Section 1015.2.2 Three or More Exits.**

*Amend Section 1015.2.2 to read as follows:*

**1015.2.2 Three or more exits or exit access doorways.** Where access to three or more exits is required, at least two exit doors or exit access doorways shall be arranged in accordance with the provisions of Section 1015.2.1. Additional exits or exit access doorways shall be arranged a reasonable distance apart so that if one becomes blocked, the others will be available.

**Section 1016.4 Exit Access Travel Distance.**

*Add Section 1016.4 to read as follows:*

**1016.4 Corridor Increases.** The travel distances specified in Table 1016.1 may be increased up to an additional 100 feet (30 480 mm) provided that the last portion of exit access leading to the exit occurs within a minimum one-hour fire-resistance rated corridor. The length of such corridor shall not be less than the amount of increase taken, in feet (mm).

**Section 1020.1.7 Smokeproof Enclosures.**

*Amend Section 1020.1.7 to read as follows, with Section 1017.1.7.1 remaining unchanged:*

**1020.1.7 Smokeproof Enclosures.** In buildings required to comply with Section 403 or 405, each of the exits of a building that serves stories where the floor surface is located more than 55 feet (16 764 mm) above the lowest level of fire department vehicle access or more than 30 feet (9144 mm) below the level of exit discharge serving such floor levels shall be a smokeproof enclosure or pressurized stairway in accordance with Section 909.20. Pressurization shall occur automatically upon activation of an approved fire alarm system.

**Section 1020.1.7.2 Enclosure Access.**

*Delete the exception from Section 1020.1.7.2 without replacement*

**Section 1023.2 Use in a Means of Egress (Exterior Exit Ramps/Stairways).**

*Amend Section 1023.2 to read as follows:*

**1023.2 Use in a means of egress.** Exterior exit ramps and stairways shall not be used as an element of a required means of egress for Group I-2 occupancies. For occupancies in other than Group I-2, exterior exit ramps and stairways shall be permitted as an element of a required means of egress for buildings not exceeding six stories above grade plane or having occupied floors more than 55 feet (16 764 mm) above the lowest level of fire department vehicle access.

**Section 1025.6.2.3 Automatic Sprinklers (Smoke-Protected Seating).**

*Delete Exceptions #1, #2, and #3 from Section 1025.6.2.3 without replacement.*

**Section 1102.1 Definitions.**

*Amend Section 1102.1; "Self-Service Storage Facility" to read as follows:*

**SELF-SERVICE STORAGE FACILITY.** Real property designed and used for the purpose of renting or leasing individual storage spaces to customers for the purpose of storing and removing property on a self-service basis.

**Section 1203.1 General (Ventilation).**

*Amend Section 1203.1 to read as follows:*

**1203.1 General.** Buildings shall be provided with natural ventilation in accordance with Section 1203.4, or mechanical ventilation in accordance with Section 1203.6 and the *International Mechanical Code*.

**Section 1203.2 Attic Spaces.**

*Amend Section 1203.2 to read as follows:*

**1203.2 Attic spaces.** Where determined necessary by the building official due to atmospheric or climatic conditions, enclosed attics and enclosed rafter space formed where ceiling are applied directly to the underside of roof framing member shall have cross ventilation openings protected against the entrance of rain and snow. Blocking and bridging shall be arranged so as not to interfere with the movement of air. A minimum of 1 inch (25 mm) of airspace shall be provided between the insulation and the roof sheathing. The net free ventilating area shall not be less than $^{1}/_{150}$ of the area of the space ventilated, with 50 percent of the required ventilating area provided by ventilators located in the upper portion of the space to be ventilated at least 3 feet (914 mm)

above eave or cornice vents with the balance of the required ventilation provided by eave or cornice vents.

> **Exception:** The minimum required net free ventilating area shall be $^{1}/_{300}$ of the area of the space ventilated, provided a vapor retarder having a transmission rate not exceeding 1 perm in accordance with ASTM E 96 is installed on the warm side of the attic insulation and provided 50 percent of the required ventilating area provided by ventilators located in the upper portion of the space to be ventilated at least 3 feet (914) above eave or cornice vents, with the balance of the required ventilation provided by eave or cornice vents.

**Sections 1203.4.1.3, 1203.4.1.4, and 1203.4.1.5 – Ventilation Area Required.**

*Add Sections 1203.4.1.3, 1203.4.1.4, and 1203.4.1.5 to read as follows:*

**1203.4.1.3 Guest rooms and habitable rooms.** Guest rooms and habitable rooms within a dwelling unit or congregate residence in R occupancies, when provided with natural ventilation by means of openable exterior openings, shall be provided with a minimum ventilation area of 5 square feet (0.46 $m^2$).

**1203.4.1.4 Bathrooms, water closets, laundry rooms and similar rooms in R occupancies.** Bathrooms, water closet compartments, laundry rooms and similar rooms in R occupancies, when provided with natural ventilation by means of openable exterior openings, shall be provided with a minimum ventilation area of 1.5 square feet (0.14 $m^2$).

**1203.4.1.5 Toilet rooms.** Toilet rooms, when provided with natural ventilation by means of openable exterior openings, shall be provided with a minimum ventilation area of 3 square feet (0.28 $m^2$), or a vertical duct not less than 100 square inches (64 516 $mm^2$) in area for the first water closet plus 50 square inches (32 258 $mm^2$) of additional area for each additional water closet.

**Section 1203.4.2.1 Bathrooms (Ventilation).**

*Delete Section 1203.4.2.1 without replacement.*

**Section 1203.6 Mechanical Ventilation.**

*Add Sections 1203.6 through 1203.6.5.2 to read as follows:*

**1203.6 Mechanical ventilation.** Mechanically operated ventilation systems shall be in accordance with Sections 1203.6.1 through 1203.6.4.

**1203.6.1 General.** In all enclosed portions of Groups A, B, E, F, H, I, M and S Occupancies customarily occupied by human beings, when mechanically operated ventilation systems are provided in lieu of required exterior openings for natural ventilation, such system shall be capable of supplying a minimum of 15 cubic feet per minute (7 L/s) of outside air per occupant in all portions of the building during such time as the building is occupied. If the velocity of the

air at a register exceeds 10 feet per second (3 m/s), the register shall be placed more than 8 feet (2438 mm) above the floor directly beneath. Such exterior openings shall open directly onto a public way or a yard or court as set forth in Section 1206.

In toilet rooms, if mechanically operated systems are to be utilized for required ventilation, such systems shall be capable of providing a complete change of air every 15 minutes. Such mechanically operated exhaust systems shall be connected directly to the outside, and the point of discharge shall be at least 3 feet (914 mm) from any opening that allows air entry into occupied portions of the building.

**1203.6.2 Groups B, F, M and S Occupancies.** In all buildings classified as Groups B, F, M and S Occupancies or portions thereof where Class I, II or III-A liquids are used, a mechanically operated exhaust ventilation system shall be provided sufficient to produce a minimum of six air changes per hour. Such exhaust ventilation shall be taken from a point at or near the floor level.

**1203.6.3 Group H Occupancies.** All Group H Occupancies shall comply with the Fire Code, Mechanical Code and Section 415. In Group H, Division 5 Occupancies, mechanical exhaust ventilation shall be provided in accordance with 415.8.2.6, 415.8.4.3, 415.8.5.7, 415.8.10.2 and other appropriate Sections of this code. Rooms, areas or spaces of Group H Occupancies in which explosive, corrosive, combustible, flammable or highly toxic dusts, mists, fumes, vapors or gases are or may be emitted due to the processing, use, handling or storage of materials shall be mechanically ventilated as required by Section 4141.3, the Fire Code, and the Mechanical Code.

**1203.6.4 Group R Occupancies.** In Group R Occupancies, in lieu of required exterior openings for natural ventilation, a mechanically operated ventilation system may be provided. Such system shall be capable of providing two air changes per hour in guest rooms, dormitories, habitable rooms and in public corridors with a minimum of 15 cubic feet per minute (7 L/s) of outside air per occupant during such time as the building is occupied.

In lieu of required exterior openings for natural ventilation in bathrooms containing a bathtub, shower or combination thereof, laundry rooms, and similar rooms, a mechanically operated ventilation system capable of providing a minimum of five air changes per hour shall be provided. Such systems shall be connected directly to the outside, and the point of discharge shall be at least 3 feet (914 mm) from any opening that allows air entry into occupied portions of the building. Bathrooms that contain only a water closet, lavatory or combination thereof and similar rooms may be ventilated with an approved mechanical re-circulating fan or similar device designed to remove odors from the air.

**1203.6.5 Motor Vehicle Related Occupancies.**

**1203.6.5.1 Repair garages.** Ventilation in repair garages shall be in accordance with Section 406.6.3.

**1203.6.5.2 Enclosed parking garages.** Ventilation in enclosed parking garage shall be in accordance with Section 406.4.2.

**Section 1603.1 General.**

*Add Exception #6 to Section 1603.1 to read as follows, with the remainder of the section unchanged:*

6. Average dead loads for roofing material.

**Table 1607.1 Minimum Uniformly Distributed Live Loads and Minimum Concentrated Live Loads.**

*Amend item #28 of Table 1607.1 to read as follows, and add footnote "m" to read as follows:*

| OCCUPANCY OR USE | UNIFORM (psf) | CONCENTRATED (lbs.) |
|---|---|---|
| 28. Residential | | |
| One- and two-family dwellings | | |
| Uninhabitable attics without storage [i, m] | 10 | |
| Uninhabitable attics with limited storage [i, j, k, m] | 20 | |
| Habitable attics and sleeping areas | 40 | ---- |
| All other areas except balconies and decks | 40 | |
| Hotels and multiple-family dwellings | | |
| Private rooms and corridors serving them | 40 | |
| Public rooms and corridors serving them | 100 | |

m. Attics, designed per uniform loads described for uninhabitable attics, are not required to be designed for the additional concentrated load of Item 32.

**Section 1607.5 Partition loads.**

*Amend Section 1607.5 to read as follows:*

**1607.5 Partition loads.** In office buildings and in other buildings where partition locations are subject to change, provisions for partition weight shall be made, whether or not partitions are shown on the construction documents, unless the specified live load exceeds 80 psf (3.83 $kN/m^2$). The partition load shall not be less than a uniformly distributed live load of 20 psf (0.96 $kN/m^2$).

**Section 1610.1 Soil Lateral Loads.**

*Amend Section 1610.1 to read as follows, with the exception deleted:*

**1610.1 General.** Basement, foundation and retaining walls shall be designed to resist lateral soil loads. When a geotechnical report is not required by the building official the design active pressure shall be 45 psf/ft and the at-rest pressure shall be 60 psf/ft. Basement walls and other walls in which horizontal movement is restricted at the top shall be designed for at-rest pressure, unless specified otherwise in a soil investigation report approved by the building official. Retaining walls free to move and rotate at the top are permitted to be designed for active

pressure. Design lateral pressure from surcharge loads shall be added to the lateral earth pressure load. Design lateral pressure shall be increased if soils with expansion potential are present at the site.

**Section 1610.1.1 Basement, foundation and retaining walls in seismic design category D, E or F.**

*Add Section 1610.1.1 to read as follows:*

**1610.1.1 Basement, foundation and retaining walls in seismic design category D, E or F.** All basement, foundation, and retaining walls in seismic design categories D, E, or F shall be designed to resist the seismic load due to the lateral earth pressure based on the following equations.

For yielding walls: $3/8\ (k_H)$ (backfill soil density) $(H)^2$ (Equation 16-35a)
For nonyielding walls: $(k_H)$ (backfill soil density) $(H)^2$ (Equation 16-35b)

Where $k_H = S_{DS} / 2.5$
$H$ = the height of the backfill behind the wall

The point of application of the resultant dynamic thrust is taken at a height of 0.6H above the base of the wall (i.e.; an inverted trapezoidal pressure distribution).

**Section 1612.3 Establishment of Flood Hazard Areas.**

*Amend Section 1612.3 to read as follows:*

**1612.3 Establishment of flood hazard areas.** To establish flood hazard areas, the governing body shall adopt a flood hazard map and supporting data. The flood hazard map shall include, at a minimum, areas of special flood hazard as identified by the Federal Emergency Management Agency in an engineering report entitled "The Flood Insurance Study for Clark County, Nevada and Incorporated Areas," dated September 27, 2002, as amended or revised with the accompanying Flood Insurance Rate Map (FIRM) and Flood Boundary and Floodway Map (FBFM) and related supporting data along with any revisions thereto. The adopted flood hazard map and supporting data are hereby adopted by reference and declared to be part of this section.

**Section 1613.1 Scope.**

*Amend Section 1613.1 to read as follows:*

**1613.1. Scope.** Every structure, and portion thereof, including nonstructural components that are permanently attached to structures and their supports and attachments, shall be designed and constructed to resist the effects of earthquake motions in accordance with ASCE 7, excluding Chapter14 and Appendix 11A. The seismic design category for a structure is permitted to be determined in accordance with Section 1612 or ASCE 7.

**Exceptions:**

1. The seismic-force-resisting system of wood-framed buildings that conform to the provisions of Section 2308 are not required to be analyzed as specified in this section.
2. Agricultural storage structures intended only for incidental human occupancy.
3. Structures that require special consideration of their response characteristics and environment that are not addressed by this code or ASCE 7 and for which other regulations provide seismic criteria, such as vehicular bridges, electrical transmission towers, hydraulic structures, buried utility lines and their appurtenances, and nuclear reactors.

**Section 1613.5.1 Mapped acceleration parameters.**

*Amend Section 1613.5.1 to read as follows:*

**1613.5.1 Mapped acceleration parameters.** The parameters $S_S$ and $S_1$ shall be determined from the 0.2 and 1-second spectral response accelerations shown on Figures 1613.5(1) through 1613.5(14) or from the 0.2 and 1-second spectral response accelerations with 2% probability of exceedance in 50 years using the latest probabilistic maps or data made available by the United States Geological Survey. Where $S_1$ is less than or equal to 0.04 and $S_S$ is less than or equal to 0.15, the structure is permitted to be assigned to Seismic Design Category A.

**Section 1613.5.5 Site classification for seismic design.**

*Amend the last paragraph of the section 1613.5.5 to read as follows, with the remainder of the section unchanged:*

The rock categories, Site Classes A and B, shall not be used if there is more than 10 feet (3048 mm) of soil between the rock surface (Classes A and B) and the bottom of the spread footing or mat foundation. This provision shall be required when a soil shear wave velocity, $v_s$, is less than 2,500 fps within 10 feet of foundation bottoms.

**Section 1613.5.5.1 Steps for classifying a site.**

*Amend Section 1613.5.5.1 by adding step #4 to read as follows:*

4. To classify a site as a site class A, B, or C per Table 1613.5.2 a minimum of one exploration to a depth of 100 feet is required per 40 acres or any portion thereof. The 100-foot exploration can be accomplished using any of the three methods outlined in Section 1613.5.5. A 100-foot exploration within 1,000 feet of the proposed site may be included in the total number of required explorations, but at least one 100-foot exploration must be located within the site boundaries. 100-foot exploration locations will be determined by the registered design professional but should be adequately spaced to classify the entire site. Additional 100-foot explorations may be required by the Building Official if soil conditions are variable across the site.

Unless the soil shear wave velocity test is utilized, one test, $N_i$ or $s_{ui}$, must be performed at ten foot intervals for the entire 100-foot exploration. Each distinctly different soil layer must also be tested. The same test used for a distinct soil layer may also be used for the ten foot interval provided the test interval does not exceed ten feet.

**Section 1704.1.2 Report Requirements.**

*Amend Section 1704.1.2 to read as follows:*

**1704.1.2 Report requirement.** Special inspectors shall keep records of required special inspections. The special inspector shall furnish inspection reports to the building official, and to the registered design professional in responsible charge. Reports shall indicate that work inspected was done in conformance to approved construction documents. Discrepancies shall be brought to the immediate attention of the contractor for correction. If the discrepancies are not corrected, the discrepancies shall be brought to the attention of the building official and to the registered design professional in responsible charge in writing prior to the completion of that phase of the work. A final report documenting required special inspections and corrections of any discrepancies noted in the inspections shall be submitted to the building official prior to the final inspection.

**Section 1704.4 Concrete Construction.**

*Amend Section 1704.4.4 to read as follows:*

**1704.4 Concrete construction.** The special inspections and verifications for concrete construction shall be as required by this section and Table 1704.4.

**Exception:** Special inspections shall not be required for:

1. Isolated spread and/or continuous concrete footings supporting walls of buildings three stories or less in height that are fully supported on earth or rock where:
   - 1.1. The footings are designed in accordance with Table 1805.4.2; or
   - 1.2. The structural design of the footing is based on a specified compressive strength $f'c$, no greater than 2,500 pounds per square inch (17.2 MPa), regardless of the compressive strength specified in the construction documents or used in the footing construction.
2. Nonstructural concrete slabs supported directly on the ground, including prestressed slabs on grade, where the effective prestress in the concrete is less than 150 pounds per square inch (1.03 MPa).
3. Concrete patios, driveways and sidewalks, on grade.

**Section 1704.5 Masonry Construction.**

*Amend Section 1704.5 to read as follows:*

**1704.5 Masonry construction.** Masonry construction shall be inspected and evaluated in accordance with the requirement of Section 1704.5.1 through 1704.5.3, depending on the classification of the building or structure or nature of the occupancy as defined by this code.

**Exception:** Special inspections shall not be required for:

1. Empirically designed masonry, glass unit masonry or masonry veneer designed by Section 2109, 2110, or Chapter 14, respectively, or by Chapter 5, 7, or 6 of ACI 530/ASCE 5/TMWS 402, respectively , when they are part of structures classified as Occupancy Category I, II, or III in accordance with Section 1604.5.
2. Masonry fireplaces, masonry heaters or masonry chimneys installed or constructed in accordance with Section 2111, 2112, or 2113, respectively.
3. Masonry fences less than or equal to 8'-0" in height, retaining walls less than or equal to 6'-0" in height or combined masonry fences and retaining walls less than or equal to 14'-0" in overall height with the retaining wall portion less than or equal to 6'-0" in height and the fence portion less than or equal to 8'-0" in height provided that the walls are designed in accordance with Chapter 2 of ACI 530/ASCE 5/TMS 402 with allowable stresses for masonry reduced by one half. Wall heights shall be measured from the top of footing to top of wall.

**Section 1704.7 Soils.**

*Amend Section 1704.7 by deleting the exception.*

**Table 1704.7 Required Verification And Inspection Of Soils.**

*Table 1704.7 is amended to read as follows:*

**TABLE 1704.7**
**REQUIRED VERIFICATION AND INSPECTION OF SOILS**

| Verification and Inspection Task | Continuous During Task Listed | Periodically During Task Listed |
|---|---|---|
| 1. Verify materials below footings are adequate to achieve the design bearing capacity. | — | X |
| 2. Verify excavations are extended to proper depth and have reached proper material. | — | X |
| 3. Perform classification and testing of controlled fill materials. | — | X |
| 4. Verify use of proper materials, densities and lift thicknesses during placement and compaction of controlled fill and other grading activities requiring special inspection, as follows: | | |
| a. All soils not meeting the requirements of categories b, c, or d. | — | X |
| b. Soil-rock fill and/or moderately | — | X |

| | | |
|---|---|---|
| expansive soils are encountered. | | |
| c. High or critically expansive soils, hydrocollapsible soils, soluble soils, and/or soils requiring chemical or mechanical (geosynthetics) stabilization are encountered. | X | — |
| d. Construction or stabilization of cut or fill slopes exceeding 5 feet in height, or any site requiring that fill be placed on a natural slope, an existing cut slope, or an existing fill slope steeper than 5:1. | X | — |
| 5. Prior to placement of controlled fill, observe subgrade and verify that site has been prepared properly. | — | X |

**Section 1704.15 Amusement and transportation systems special cases:**

*Add Section 1704.15 to read as follows:*

**1704.15 Amusement and transportation systems special cases.** When testing or verification is required by the manufacturer or specified by the building official, the testing and verification shall occur during the initial installation, operational testing and annual renewal of the certificate of operation.

**Section 1802.1 General.**

*Amend Section 1802.1 to read as follows:*

**General.** Foundation and soils investigations shall be conducted in conformance with Sections 1802.2 through 1802.6. Where required by the building official, the classification and investigation of the soil shall be made by a registered design professional.

All projects exempt from a geotechnical report shall comply with Tables 1804.2 and ACI 318, Section 4.3. Design values shall be based on a Class 5 material and a severe sulfate exposure level may be selected as default values.

**Section 1802.2 Where required.**

*Amend Section 1802.2 to read as follows, with Sections 1802.2.1 and 1802.2 remaining unchanged:*

**1802.2 Where required.** The owner or applicant shall submit a foundation and soils investigation to the building official where required in Sections 1802.2.1 through 1802.2.7.

Geotechnical reports shall be prepared by a registered design professional. Recommendations included in the report and approved by the building official shall be incorporated in the

construction documents. Geotechnical reports shall be required for all projects that require new foundations.

**Exceptions.** At the option of the building official, the following projects may be exempted from having a geotechnical report:

A.) Any structure, addition, or remodel associated with a single family residence with a footprint less than 600 square feet.
B.) Single story commercial structures with a footprint less than 600 square feet.
C.) Fences.
D.) Site retaining walls less than 5 feet in retained height as measured from the top of the footing.
E.) Mobile homes, trailers, modular buildings, and pre-engineered carports.
F.) Signs less than 50 feet in height.

**Section 1802.2.3 Ground-water table.**

*Delete the exception to Section 1802.2.3 without replacement.*

**Section 1802.3.2 Expansive soils.**

*Amend Section 1802.3.2 to read as follows:*

**1802.3.2 Expansive soils.** Soils meeting all four of the following provisions shall be considered expansive, except that tests to show compliance with Items 1,2 and 3 shall not be required if the test prescribed in either Item 4 or Item 5 is conducted:

1. Plasticity Index (PI) of 15 or greater, determined in accordance with ASTM D 4318.
2. More than 10 percent of the soil particles pass a No. 200 sieve (75 mm), determined in accordance with ASTM D 422.
3. More than 10 percent of the soil particles are less than 5 micrometers in size, determined in accordance with ASTM D 422.
4. Expansion Index greater than 20, determined in accordance with ASTM D 4829.
5. Soils may be determined to be expansive or non-expansive by the preceding methods or the standard 60 pound swell test. When the standard 60 pound swell test is performed any soil with a swell greater than 4 percent shall be considered expansive. When soils are determined to be expansive special design consideration is required. In the event that expansive soil properties vary with depth the variation shall be included in the engineering analysis of the expansive soil effect on the structure. The foundation design and special inspection for grading/foundations shall be based upon results obtained from the standard 60 pound swell test. Refer to Section 1805.8 for additional requirements.

**Section 1802.3.3 Standard 60 pound swell test.**

*Add Section 1802.3.3 to read as follows:*

**1802.3.3 Standard 60 pound swell test.** The swell test samples may be remolded to the in-place density required for the particular soil type as called for in the Geotechnical Report or it may be an in-situ undisturbed sample. The test samples shall be one inch thick and laterally confined by placing them in a consolidometer retaining ring constructed in accordance with ASTM D-2435. The swell test sample shall be oven dried at 60° C, and the sample shall be dried a minimum of eight (8) hours. The test samples shall be inundated with water and kept in a saturated moisture condition until measurable swelling or vertical movement ceases. The swell test shall use a 60 pounds per square foot surcharge load. The balance of the swell test will be per ASTM D-2435. Swell test results shall be interpreted using Section 1805.8.

**Section 1802.4.2 Minimum Exploration Requirements.**

*Add Section 1802.4.2 to read as follows:*

**1802.4.2 Minimum Exploration Requirements**. The minimum exploration requirements are as follows:

1. For areas less than or equal to one acre, a minimum of two explorations.
2. For areas greater than one acre, but less than five acres, a minimum of one exploration for the first acre and one for each additional two acres, or portion thereof.
3. For areas greater than five acres, but less than twenty acres, a minimum of three explorations plus one additional exploration for each three acres above five.
4. For areas greater than twenty acres, a minimum of eight explorations plus one additional exploration for each five acres or fraction thereof above twenty.
5. Building additions of less than 2,000 square feet shall require a minimum of one exploration.
6. For signs, towers, and monopoles whose locations are known and only that area of the site is to be developed, a minimum of one exploration is required.
7. The minimum depth of the exploration shall be ten feet. Exploration depth shall be increased as necessary to evaluate the suitability of the material within the foundation's depth of influence as determined by the registered design professional. Should refusal be encountered the explorations can be terminated. However, at least three-fourths of the required explorations shall be to the minimum depth. The geotechnical report shall clearly state the criteria used to determine that refusal was met. When information regarding the final grades is made available, the registered design professional shall determine if the explorations originally documented in the geotechnical report meet the depth requirements.

**Section 1802.6 Reports.**

*Amend Section 1802.6 to read as follows:*

**1802.6 Reports.** The soil classification and design load-bearing capacity shall be shown on the construction document. Where required by the building official, a written report of the

investigation shall be submitted that shall include, but need not be limited to, the following information:

1. A plot showing the location of test borings and/or excavations. The plot shall be dimensioned and shall show the approximate location of all existing structures.
2. A complete record of the soil samples.
3. A record of the soil profile.
4. Depth of the water table, if encountered.
5. Recommendations for foundation type and design criteria, including but not limited to: bearing capacity of natural or compacted soil; provisions to mitigate the effects of expansive soils; mitigation of the effects of liquefaction, differential settlement, and varying soil strength; and the effects of adjacent loads. Provide provisions to mitigate the effects of collapsible soils, soluble soils, uncontrolled fill, chemical heave, and corrosive soils. Provide all test data.
6. Expected total and differential settlement. Provide all test data and supporting calculations when the allowable foundation bearing pressure exceeds 4,000 psf.
7. Pile and pier foundation information in accordance with Section 1808.2.2.
8. Special design and construction provisions for footings or foundations founded on expansive soils, as necessary.
9. Compacted fill material properties and testing in accordance with Section 1803.5. Provide provisions to mitigate the effects of collapsible soils, soluble soils, uncontrolled fill, chemical heave, and corrosive soils.
10. Soil classification by the Unified Soil Classification System. Backup data on tests performed in the soil classification shall be included.
11. Classify the expansion level of the soil and specify the minimum embedment depth per Table 1805.2.4.
12. Address, if applicable, the possible impacts on adjoining properties and mitigating measures to be undertaken.
13. Suitability of onsite soils for use as fill material.
14. Provide grading requirements for onsite and import soils (where applicable) including, but not limited to, swell, solubility, and sulfates.
15. Geotechnical design considerations for drainage structures, as applicable.
16. Trenching or other special procedures for determining fault and fissure(s) locations. The potential for differential movement across a fault and fissuring should be evaluated.
17. Procedures for mitigation for geological hazards.
18. Erosion control requirements, as applicable.
19. Anticipated structural loads and type of proposed structure.
20. When a post-tensioned slab-on-ground is recommended the geotechnical report must specify the all soil parameters as required by Section 1805.8.2.
21. All lateral earth pressures and seismic forces shall be reported in psf/ft and distributions expressed in graphical form. All resulting forces must have a recommendation on wall placement location.
22. Site class per Table 1613.5.5, including all test data and supporting calculations.
23. Call out the latitude and longitude in decimal degrees to four decimal places for the purpose of determining the site seismic acceleration (NAD_1983_State Plane_Nevada_East_FIPS_2701_Feet ).

24. Specify the level of special inspection should not be less than specified in Table 1704.7.
25. All geotechnical reports must be current within the last 12 months. Any report older than 12 months must be accompanied by a wet sealed update letter addressing the current site conditions based on a recent site visit.

**Section 1803.3 Site Grading Exception.**

*Amend Section 1803.3 to read as follows:*

The ground immediately adjacent to the foundation shall be sloped away from the building at a slope of not less than one unit vertical in 20 units horizontal (5-percent slope) for a minimum distance of 10 feet (3048 mm) measured perpendicular to the face of the wall. If physical obstructions or lot lines prohibit 10 feet (3048mm) of horizontal distance, a 5-percent slope shall be provided to an approved alternative method of diverting water away from the foundation. Swales used for this purpose shall be sloped a minimum of 1 percent along the flow line where located within 10 feet (3048mm) of the building foundation. Impervious surfaces within 10 feet (3048mm) of the building foundation shall be sloped a minimum of 2 percent away from the building.

**Exception:** Where low expansive, low collapsible, low soluble soil conditions occur or where an exterior asphalt or concrete surface abuts a building, the slope of the ground away from the building foundation is permitted to be reduced to not less than one unit vertical in 48 units (2 percent slope).

**Section 1803.5 Compacted fill material.**

*Add items #8 and #9 to Section 1803.5 to read as follows:*

8. Flooding or jetting shall not be used to compact fill material that will support footings or foundation systems.
9. Placement procedure for oversized fill material. No rock or similar irreducible material with a maximum dimension greater than 12 inches shall be buried or placed in fills within five feet, measured vertically, from the bottom of the footing or lowest finished floor elevation, whichever is lower, within the building pad. Oversized fill material shall be placed so as to assure the filling of all voids with well-graded soil. Specific placement and inspection criteria shall be stated in the geotechnical report. Continuous special inspection will be required during placement of any oversized fill material.

**Section 1803.5 Compacted fill material.**

*Amend exception of Section 1803.5 to read as follows:*

**Exception:** When a geotechnical report is not required by the building official, all fill material shall be compacted to a minimum of 90 percent Modified Proctor in accordance with ASTM D1557.

**Section 1805.1.1 Minimum Distances to Ground Faulting.**

*Add Section 1805.1.1 to read as follows:*

**1805.1.1 Minimum Distances to Ground Faulting.**

1. The minimum set back for an occupied structure from a Holocene active fault shall be fifty (50) feet. The minimum set back for an Occupancy Category IV structure, an R3 occupancy or a multifamily building shall not be less than five (5) feet to any Quaternary active fault.
2. When the Geotechnical Report establishes that neither a fault nor a fault zone exists on the project, no fault zone set back requirements will be imposed.
3. If through exploration, the fault location is defined, the fault and/or the no build zone shall be clearly shown to scale on the grading, plot plan(s), and final map.
4. When the fault location is not fully defined by explorations but a no build zone of potential fault impact is established by the soils report, no portion of the foundation system shall be constructed within that zone. The no build zone shall be clearly shown to scale on the grading, plot plan(s), and final map.
5. For single lot, single family residences, the fault location may be approximated by historical research as indicated in the soils report. A no build zone of at least fifty (50) feet each side of the historically approximated fault edge shall be established. A no build zone shall be clearly shown to scale on the grading, plot plan(s), and final map.

**Section 1805.2 Depth of footings.**

*Amend Section 1805.2 to read as follows, with Sections 18052.1 through 1805.2.3 remaining unchanged:*

**1805.2 Depth of footings**. The minimum depth of footings below the undisturbed ground surface shall be 12 inches (305 mm). Where applicable, the depth of footings shall also conform to Sections 1805.2.1 through 1805.2.3. All excavations and the depth of any footing must be made below the lowest adjacent compacted subgrade to ensure full embedment of the footing into the compacted subgrade prior to concrete placement unless otherwise recommended in the approved geotechnical report.

**Section 1805.2.4 Minimum Foundation Depth in Expansive Soils.**

*Add Section 1805.2.4 to read as follows:*

**1805.2.4 Minimum Foundation Depth in Expansive Soils.** The minimum foundation depth requirements when placing foundations in expansive soil shall be per Table 1805.2.4.

**Table 1805.2.4 Minimum Thickened Edge or Foundation Depth**

*Add Table 1805.2.4 to read as follows:*

**Table 1805.2.4**
**Minimum Thickened Edge or Foundation Depth[1]**

| Expansion | Percent Swell under 60 psf Surcharge | Minimum Thickened Edge or Foundation Depth (inches) |
|---|---|---|
| Low | > 0 to <4 | 12 |
| Moderate | ≥ 4 to < 8 | 12 |
| High | ≥ 8 to < 12 | 18 |
| Critical 12 | ≥ 12 to < 16 | 24 |
| Critical 16 | ≥ 16 to < 20 | 30 |
| Critical 20+ | 20 or greater | 36 |

Footnote:

1. Thickened edge embedment depth shall be measured from the top of the lowest adjacent final compacted subgrade to the bottom of the footing.

**Section 1805.5 Foundation walls.**

*Amend Section 1805.5 to read as follows, with Sections 1805.5.1 through 1805.2.1 remaining unchanged:*

**1805.5 Foundation walls.** Concrete and masonry foundation walls shall be designed in accordance with Chapter 19 or 21, respectively. In Seismic Design Category A or B, foundation walls that are laterally supported at the top and bottom and within the parameters of Tables 1805.5(1) through 1805.5(5) are permitted to be designed and constructed in accordance with Sections 1805.5.1 through 1805.5.5.

**Section 1805.5.2.2 Masonry Foundation Walls.**

*Amend Section 1805.5.2.2 to read as follows:*

**1805.5.2.2 Masonry Foundation Walls.** Masonry foundation walls shall comply with the following:

1. Vertical reinforcement shall have a minimum yield strength of 60,000 psi (414 MPa).
2. The specified location of the reinforcement shall equal or exceed the effective depth distance, d, noted in Tables 1805.5(2), 1805.5(3), and 1805.5(4) and shall be measured from the face of the exterior (soil) side of the wall to the center of the vertical reinforcement. The reinforcement shall be placed within the tolerance specified in ACI 530.1/ASCE 6/TMS 402, Article 3.4 B7 of the specified location.
3. The portions of the wall below grade shall be solid grouted.
4. Grout shall comply with Section 2103.12.
5. Concrete masonry units shall comply with ASTM C90.

6. Clay masonry units shall comply with ASTM C652 for hollow brick, except compliance with ASTM C62 or ASTM C216 is permitted when solid masonry units are installed in accordance with Table 1805.5(1) for plain masonry.
7. Masonry units shall be installed with Type M or S mortar in accordance with Section 2103.8.
8. The unfactored axial load per linear foot of wall shall not exceed 1.2 $tf'_m$ where $t$ is the specified wall thickness in inches and $f'_m$ is the specified compressive strength of the masonry in pounds per square inch.

**Section 1805.8.2 Slab-On-Ground Foundations.**

*Amend Section 1805.8.2 to read as follows:*

**1805.8.2 Slab-on-ground foundations.** Moments, shears, and deflections for use in determining slab-on-ground, mat or raft foundations on expansive soils shall be determined in accordance with *WRI/CRSI Design of Slab-on-Ground Foundation* or *PTI Standard Requirements of Analysis of Shallow Concrete Foundation on Expansive Soils.* Using the moments, shears and deflections determined above, nonprestressed slabs-on-ground, mat or raft foundations on expansive soils shall be designed in accordance with *WRI/CRSI Design of Slab-on-Ground Foundation* and post-tensioned slab-on-ground, mat or raft foundations on expansive soils shall be in accordance with *PTI Standard Requirements of Analysis of Shallow Concrete Foundation on Expansive Soils.* The criteria for determining the expansive nature of soils are given in Section 1802.3.2. The minimum design criteria for post-tensioned slabs are defined in Table 1805.8.2. It shall be permitted to analyze and design such slabs by other methods that account for soil-structure interaction, the deformed shape of the soil support, the plate or stiffened plate action of the slab as well as both center lift and edge lift conditions. Such alternate methods shall be rational and the basis for all aspect and parameters of the method shall be available for peer review.

**Table 1805.8.2 Post Tension Slab Criteria.**

*Add Table 1805.8.2 to read:*

**Table 1805.8.2**
**Post Tension Slab Criteria.**

| Expansion | Percent Swell under 60 psf Surcharge | Design Values Ym (inches) for PT slabs | |
|---|---|---|---|
| | | Edge Lift | Center Lift |
| Low | > 0 to <4 | 1/8 to 1/4 | ----- |
| Moderate | ≥ 4 to < 8 | 1/4 to 1/2 | 1/8 to 3/8 |
| High | ≥ 8 to < 12 | ½ to 1 | 3/8 to 1 |
| Critical 12 | ≥ 12 to < 16 | See Note No. 11 | |
| Critical 16 | ≥ 16 to < 20 | See Note No. 11 | |
| Critical 20+ | 20 or greater | See Note No. 11 | |

Footnotes:

1. This chart is intended to address expansive soil. The presence of collapsible soil or other geologic conditions may require different design criteria.
2. Foundations shall be designed to meet design criteria of PTI-2004. Both edge lift and center lift conditions need to be evaluated.
3. Edge moisture variation distance (Em) shall be a minimum of 2.5 feet for edge lift and 4.75 feet for center lift.
4. CΔ for prefabricated roof truss clear spans shall be 360 for center lift and 800 for edge lift.
5. Typical systems using stiffener beams may be equated to a flat slab of equivalent stiffness. Stiffening beams in ribbed foundations shall be as required by PTI-2004. Conventionally reinforced designs may also be used.
6. Modulus of elasticity of the soil (Es) shall be taken as 1000 psi unless tests indicate otherwise.
7. All concrete in the foundation system must be a minimum of 2500 psi and shall comply with IBC Section 1904.3. Lean concrete shall not be permitted in slabs or beams.
8. In addition to the slab stiffness requirements of PTI-2004, the calculated differential deflection of the foundation slab shall not exceed 1/2 inch for edge lift.
9. Perimeter loading of slab (P) shall be limited to dead load.
10. Expansion (swell) test shall be performed in accordance with SECTION 1802.3.3.
11. Specific recommendations from Geotechnical engineer required. Design value (Ym) shall be a minimum of 1 inch.
12. For soil conditions where a low swell potential is determined, a BRAB Type II may be used.

## Section 1806 Retaining Walls.

*Amend Section 1806.1 to read as follows:*

**1806.1 General.** Retaining walls shall be designed to ensure stability against overturning, sliding, excessive foundation pressure and water uplift. Retaining walls shall be designed for a safety factor of 1.5 against sliding and overturning when considering load combinations that do not include seismic or wind. Retaining walls shall be designed for a safety factor of 1.1 against sliding and overturning when considering load combinations that include seismic loads. Retaining walls shall be designed for a safety factor of 1.3 against sliding and overturning when considering load combinations that include wind loads.

## Section 1910.2 Post Tension Slab Provisions.

Add section 1910.2 to read as follows:

**1910.2 Post Tension Slab Provisions**. Where post-tensioned slabs-on-ground are utilized, design shall be in accordance with PTI Design of Post-Tensioned Slabs-On-Ground, Third Edition. Design for expansive soils is specified in Section 1805.8.

**Section 2305.3.11 Sill plate size and anchorage in Seismic Design Category D, E or F.**

*Amend Section 2305.3.11 to read as follows:*

**2305.3.11 Sill plate size and anchorage in Seismic Design Category D, E or F.** Shear wall sill plates shall be anchored with anchor bolts with steel plate washers between the sill plate and nut or with approved anchor straps spaced to provide equivalent anchorage. Steel plate washers shall be a minimum of 0.229 inch by 3 inches by 3 inches (5.82mm by 76mm by 76mm) in size. The hole in the plate washer is permitted to be diagonally slotted with a width of up to 3/16 inch (4.76mm) larger than the bolt diameter and a slot length not to exceed 1 ¾ inches (44mm), provided a standard cut washer is placed between the plate washer and the nut. Sill plates resisting a design load greater than 490 plf (7154 N/m) using load and resistance factor design or 350 plf (5110 N/m) using allowable stress design shall not be less than a 3-inch (76mm) nominal member. Where a single 3-inch (76mm) nominal sill plates is used, 2-20d box end nails shall be substituted for 2-16d common end nails found in line 8 of Table 2304.9.1.

> **Exception:** In shear walls where the design load is greater than 490 plf (7151 N/m) but less than 840 plf (12264 N/m) using load and resistance factor design or greater than 350 plf (5110 N/m) but less than 600 plf (8760 N/m) using allowable stress design, the sill plate is permitted to be a 2-inch (51mm) nominal member if the sill plate is anchored by two times the number of anchors required by design. Where bolts are installed, 0.229-inch by 3-inch by 3-inch (5.82mm by 76mm by 76mm) plate washers shall be used.

**Section 2308.6 Foundation plates or sills.**

*Amend Section 2308.6 to read as follows:*

**2308.6 Foundation plates or sills.** Foundations and footings shall be as specified in Chapter 18. Foundation plates or sills resting on concrete or masonry foundations shall comply with Section 2304.3.1. Foundation plates or sills shall be bolted or anchored to the foundations with not less than 1/2–inch-diameter (12.7mm) steel bolts or approved anchors spaced to provide equivalent anchorage as the steel bolts. Bolts shall be embedded at least 7 inches (178mm) into concrete or masonry, and spaced not more than 6 feet (1829mm) apart. There shall be a minimum of two bolts or anchor straps per piece with one bolt or anchor strap located not more than 12 inches (305mm) or less than 4 inches (102mm) from each end of each piece. A properly sized nut and washer shall be tightened on each bolt to the plate.

> **Exception:** Where field conditions preclude the placement of the minimum anchors, a registered design professional may provide a design for alternative attachment in accordance with accepted engineering practice.

**Section 2308.9.8 Pipes in walls.**

*Amend Section 2308.9.8 to read as follows:*

**2308.9.8 Pipes in walls.** Stud partitions containing plumbing, heating or other pipes shall be so framed and the joists underneath so spaced as to give proper clearance for the piping. Where a partition containing such piping runs parallel to the floor joists, the joists underneath such partitions shall be doubled and spaced to permit the passage of such pipes and shall be bridged. Where plumbing, heating or other pipes are placed in or partly in a partition, necessitating the cutting of the soles or plates, a metal tie not less than 0.058 inch (1.47mm) (16 galvanized gage) and 1 ½ inches (38mm) wide shall be fastened to each plate across and to each side of the opening with not less than six 1 ½" x 0.148" minimum nails.

**Section 2308.12.8 Steel plate washers.**

*Amend Section 2308.12.8 to read as follows:*

**2308.12.8 Sill plate anchorage.** Sill plates shall be anchored with anchor bolts with steel plate washers between the foundation sill plate and the nut, or approved anchor straps. Over the full length of braced wall lines, such washers shall be a minimum of 0.229 inch by 3 inches by 3 inches (5.62mm by 76mm by 76mm) in size. The hole in the plate washer is permitted to be diagonally slotted with a width of up to 3/16 inch (4.76mm) larger than the bolt diameter and a slot length not to exceed 1 ¾ inches (44mm), provided a standard cut washer is placed between the plate washer and the nut. Standard cut washers shall be permitted for anchor bolts in wall lines not containing braced wall panels.

**Section 2308.12.9 Anchorage in Seismic Design Category E.**

*Amend Section 2308.12.9 to read as follows:*

**2308.12.9 Sill plate anchorage in Seismic Design Category E.** Steel bolts with a minimum nominal diameter of 5/8 inch (915.9mm) or approved foundation anchor straps spaced to provide equivalent anchorage shall be used in Seismic Design Category E.

**Section 2604.2.3 Area limitation.**

*Amend Sections 2604.2.3 to read as follows:*

**2604.2.3 Area limitation.** The interior trim shall not constitute more than 10 percent of the specific wall or ceiling area to which it is attached.

**Section 2606.7.4 Fire suppression system.**

*Amend Sections 2606.7.4 to read as follows:*

**2606.7.4 Fire suppression system.** In buildings that are equipped throughout with an automatic sprinkler system in accordance with Section 903.3.1.1, plastic light-diffusing systems shall be protected both above and below unless the sprinkler system has been specifically approved for installation only above the light-diffusing system. Areas of light-diffusing systems that are protected in accordance with this section shall be limited to a maximum panel size of 10 feet by 10 feet. Adjacent panels shall be separated by at least 8 feet vertical or 4 feet horizontal.

**Section 2606.7.5 Electrical lighting fixtures.**

*Amend Section 2606.7.5 to read as follows:*

**2606.7.5 Electrical lighting fixtures.** Light-transmitting plastic panels and light-diffuser panels that are installed in approved electrical lighting fixtures shall comply with the requirements of Chapter 8 unless the light-transmitting plastic panels conform to the requirements of Section 2606.7.2. The area of approved light-transmitting plastic materials that are used in required exits or corridors shall not exceed the limitations listed in Sections 2606.7.3 and 2606.7.4 as applicable.

**Section 2611 Light-transmitting plastic interior signs**

*Amend Section 2611.1 to read as follows:*

**2611.1 General.** Light-transmitting plastic interior signs shall be limited as specified in Sections 2611.2 through 2611.5. Light-transmitting plastic interior signs shall also comply with Section 2606.

> **Exception:** Light-transmitting plastic interior wall signs in covered mall buildings shall comply with Section 402.15.

**Section 2611.2 Aggregate area.**

*Amend Section 2611.2 to read as follows:*

**2611.2 Aggregate area.** The aggregate area of signs shall not exceed 20 percent of the wall area.

> **Exception:** Hanging or base supported signs.

**Section 2611.3 Separation.**

*Delete Section 2611.3 and replace with a new Section 2611.3 to read as follows:*

**2611.3 Separation.** Signs shall be separated from each other by at least 4 feet horizontally or 8 feet vertically.

**Section 2611.4 Maximum area.**

*Delete Section 2611.4 and replace with a new Section 2611.4 to read as follows:*

**2611.4 Maximum area.** The aggregate area of all light-transmitting plastics in each individual sign shall not exceed 24 square feet (2.23 $m^2$).

**Exceptions:**

1. Signs are permitted to exceed an aggregate area of 24 square feet of light-transmitting plastics, provided the sign meets all the following:
   a. does not exceed a maximum dimension of 10 feet,
   b. the light-transmitting plastic is a minimum CC1 material,
   c. is listed and labeled in accordance with nationally recognized standards, and
   d. is installed in a building fully protected by automatic sprinklers in accordance with Section 903.3.1.1.
2. Signs exceeding the 10 foot limitation of Exception 1 are permitted provided the sign meets all the following:
   a. the height does not exceed 10 feet,
   b. the length does not exceed 60 feet,
   c. the area does not exceed 500 square feet,
   d. the light-transmitting plastic is a minimum CC1 material,
   e. is listed and labeled in accordance with nationally recognized standards,
   f. the top of the sign is within 15 feet of ceiling sprinklers,
   g. the space in which the sign is installed is protected with an automatic sprinkler system of at least Ordinary Hazard Group 2, and
   h. a Fire Protection Report is provided to substantiate the preceding requirements are met.

**Section 2611.5 Encasement.**

*Add Section 2611.5 to read as follows:*

**2611.5 Encasement.** Edges and backs shall be fully encased in metal.

**Exception:** Hanging or base supported signs need only have the non-illuminated portions fully encased in metal.

**Table 2902.1 Minimum Number of Required Plumbing Fixtures.**

*Amend Table 2902.1 by removing all references to the International Plumbing Code which have correlating code sections, add "casino" line at A-2 Occupancy, and add footnotes "e" and "f" to read as follows, with the remainder of Table being unchanged:*

| [P] TABLE 2902.1<br>MINIMUM NUMBEROF REQUIREDPLUMBING FIXTURES [a]<br>(See Sections 2902.2 and 2902.3) |
|---|

| NO. | CLASSIFICATION | OCCUPANCY | DESCRIPTION | WATER CLOSETS (URINALS e) | | LAVATORIES | | BATHTUBS/ SHOWERS | DRINKING FOUNTAINS f | OTHER |
|---|---|---|---|---|---|---|---|---|---|---|
| | | | | MALE | FEMALE | MALE | FEMALE | | | |
| | | | | | | | | | | |
| 1 | Assembly (see Sections 2902.2, 2902.4 and 2902.4.1) | A-2d | Casino | 1:1-100 | 3:1-50 | 1:1-200 | | | | 1 service sink |
| | | | | 2:101-200 | 4:51-100 | 2:201-400 | | | | |
| | | | | 3:201-400 | 6:101-200 | 3:401-750 | | | | |
| | | | | ----- | 8:201-400 | Over 750, add one fixture for each additional 500 persons. | | | | |
| | | | | Over 400, add one fixture each additional 250 males, and one for each 150 females. | | | | | | |
| | | | | | | | | | | |
| | | | | | | | | | | |
| | | | | | | | | | | |

e. In each bathroom or toilet room, urinals shall not be substituted for more than 67 percent of the required water closets in assembly and educational occupancies. Urinals shall not be substituted for more than 50 percent of the required water closets in all other occupancies. Trough urinals shall be prohibited.

f. Where water is served in restaurants and similar occupancies, drinking fountains shall not be required. In other occupancies, where drinking fountains are required, water coolers or bottled water dispensers shall be permitted to be substituted for not more than 50 percent of the required drinking fountains. Drinking fountains shall not be required in occupancies of 30 or less. Drinking fountains shall not be installed in toilet rooms.

**Section 3002.4 Elevator Car to Accommodate Ambulance Stretcher.**

*Amend Section 3002.4 read as follows;*

**3002.4 Elevator car to accommodate ambulance stretcher.** Where elevators are provided in buildings four or more stories above grade or four or more stories below grade plane, at least one elevator, and no less than the minimum number specified in Table 3002.4, shall be provided for fire department emergency access to all floors. The elevator car shall be of such a size and arrangement to accommodate a 24-inch by 84-inch (610 mm by 1930 mm) ambulance stretcher in the horizontal, open position and shall be identified by the international symbol for emergency medical services (star of life). The symbol shall not be less than 3 inches (76 mm) high and shall be placed inside on both sides of the hoistway door frame.

**Table 3002.4 Ambulance stretcher sized elevator cars.**

*Add Table 3002.4 to read as follows:*

**TABLE 3002.4**
**AMBULANCE STRETCHER SIZED ELEVATOR CARS**

| NUMBER OF BUILDING STORIES | NUMBER OF ELEVATOR CARS SIZED TO ACCOMMODATE AN AMBULANCE STRETCHER |
|---|---|
| 1-30 | 1 |
| 31-60 | 2 |
| 61-90 | 3 |
| 91 and greater | 4 |

**Section 3003.1.3 Two or More Elevators.**

*Amend Section 3003.1.3 to read as follows:*

**3003.1.3 Two or more elevators.** Where two or more elevators are controlled by a common operating system, all elevators shall automatically transfer to standby power within 60 seconds after failure of normal power where the standby power source is of sufficient capacity to operate all elevators at the same time. Where the standby power source is not of sufficient capacity to operate all elevators at the same time, all elevators shall transfer to standby power in sequence, return to the designated landing and disconnect from the standby power source. After all elevators have been returned to the designated level, at least one elevator, and all elevators installed in accordance with Section 3002.4, shall remain operable from the standby power source.

**Section 3109.1 Swimming Pool Enclosures and Safety Devices.**

*Amend Section 3109.1 to read as follows:*

**3109.1 General.** Swimming pools shall comply with the requirements of the Southern Nevada Pool Code.

**Section 3109.2 Definitions through 3109.5.4 Pool cleaner fittings.**

*Delete Sections 3109.2 through 3109.5.4 without replacement.*

**Section 3110 Cabanas.**

*Add Sections 3110.1 through 3110.9 to read as follows:*

**SECTION 3110 CABANAS**

**3110.1 General.** This section shall apply to cabanas on, or in close proximity to, buildings where the predominant building construction type would not otherwise allow cabanas to be constructed as membrane structures in accordance with Section 3102.3. Cabanas that are erected for a period of less than 180 days shall comply with the *International Fire Code*.

**3110.2 Definitions.** The following words and terms shall, for the purposes of this section, have the meanings shown herein:

**CABANA.** A structure used for temporary shelter, comfort and privacy of occupants located on, or in close proximity to, a building. Cabanas shall not be used for retail sales, bar service, food preparation, storage, or overnight sleeping.

**CABANA GROUP.** A group of individual cabanas that are not separated from each other as required within this section. The total area of the cabana group shall be used to determine code requirements for all cabanas contained within the cabana group.

**3110.3 Design and Construction.** Cabanas shall be designed and constructed to withstand wind or other lateral loads and live loads as required by Chapter 16 with due allowance for shape, open construction and similar features that relieve the pressures or loads. Structural members shall be protected to prevent deterioration.

**3110.3.1 Frame.** Cabanas shall be constructed of a rigid, noncombustible frame that is permanently mounted to the roof or deck on which it is located.

**3110.3.2 Membrane Covering.** The membrane covering of the cabana shall either be noncombustible in accordance with Section 703.4 or be tested by an approved agency and pass Test 2 of NFPA 701.

**3110.3.3 Openness.** Each cabana shall be provided with a minimum of one opening to an exterior egress route. Such opening shall provide a minimum unobstructed opening of 5 feet (1524 mm) wide by 7 feet (2134 mm) high.

**3110.3.4 Height.** The highest point of a cabana shall not exceed 20 feet (4572 mm).

**3110.3.5 Area.** The area of any single cabana or cabana group shall not exceed 500 square feet (46.45 $m^2$).

**Exception:** The area of cabanas that are constructed entirely of noncombustible materials shall not exceed 1000 square feet (92.90 $m^2$).

**3110.4 Location.** Cabanas shall be located to minimize the hazard to the building, other cabanas, and the means of egress.

**3110.4.1 Separation between cabanas.** Cabanas shall be separated from all other cabanas by a minimum distance of 10 feet (3048 mm), as measured at the nearest horizontal projection. Where cabanas do not meet this spacing, the cabanas shall be considered a cabana group, and the cabana group shall meet the requirements set forth herein.

**3110.4.2 Separation between cabana groups.** Cabana groups shall be separated from all other cabanas by a minimum distance of 10 feet (3048 mm), as measured at the nearest horizontal projection.

**3110.4.3 Separation to building.** Cabanas shall be a minimum of 10 feet (3048 mm) from any wall or building opening, and shall not be located beneath any horizontal projection of the main building.

**3110.4.4 Obstruction to means of egress.** Cabanas shall be located and spaced such that the required means of egress is not obstructed by the cabanas for the entire height of the cabanas.

**3110.5 Automatic sprinkler system.** Cabanas and cabana groups shall be protected throughout with an automatic sprinkler system in accordance with Section 903.3.1.1.

**Exception:** An automatic sprinkler system shall not be required in cabanas or cabana groups that do not exceed 120 square feet (11.148 $m^2$) in area.

**3110.6 Cooking facilities.** Cooking shall not be permitted within 20 feet (6096 mm) of a cabana or inside a cabana.

**3110.7 Fuel-fired equipment.** Fuel-fired equipment shall not be permitted within 20 feet (6096 mm) of a cabana or inside a cabana.

**3110.8 Lighting.** All lighting within or attached to cabanas shall be electric. Open flames for any purpose are prohibited within 20 feet (6096 mm) of a cabana or inside a cabana.

**3110.9 Fire protection report.** A fire protection report shall be submitted and shall address the type of construction of the main structure and the cabana(s), the size of the cabana(s), fire protection systems for the cabana(s), and the impact of the cabana(s) on the means of egress.

**Section 3401.3 Compliance with Other Codes**

*Amend Section 3401.3 to read as follows:*

**3401.3 Compliance with other codes.** Alterations, repairs, additions, and changes of occupancy to existing structures shall comply with the provisions for alterations, repairs, additions and changes to occupancy in the *International Fire Code*, *International Mechanical Code*, *International Plumbing Code*, *International Residential Code*, and *International Electrical Code.*

**Appendices A, B, D, F, G and K.**

*Do not adopt Appendices A, B, D, F, G and K.*

**Appendices C, E, H, and I.**

*Adopt Appendices C, E, H, and I unchanged.*

**Appendix J Section J101 General.**

*Adopt Appendix J Section J101 through J101.2 unchanged.*

**Appendix J Section J102.1**

*Amend Subsection J102.1 by amending the initial paragraph to read as follows:*

For the purposes of this appendix chapter and Chapters 18 and 19 of this code, the terms, phrases and words listed in this section and their derivatives shall have the indicated meanings.

*Adopt and amend Section J102.1 to include the following definitions:*

**BUILDING PAD.** The soil, cut or fill site, outlined by the area of the footprint of the building plus a minimum of 5 additional feet (1529 mm) to the exterior. This includes any type of foundation system for the structure.

**FAULT.** A fracture or zone of fracturing in geologic materials (soil or rock) along which there has been displacement of the sides relative to one another parallel to the fracture.

**FAULT, HOLOCENE ACTIVE.** A fault with recognized activity within Holocene time (within the past 11,000 years).

**FAULT, QUATERNARY ACTIVE.** A fault with recognized activity within Quaternary time (within the past 1.6 million years).

**FAULT INACTIVE.** A fault without recognized activity within Quaternary time (within the past 1.6 million years).

**FINAL GRADING REPORT.** A grading report stamped and signed by a registered design professional certifying that the building pad was constructed in conformance with the recommendations set forth in the geotechnical report. This report contains explicit information and data that verifies compliance with the geotechnical report of record including any approved supplements or addendums.

**GEOTECHNICAL REPORT (SOILS REPORT).** Data and engineering recommendations resulting from site exploration which evaluates the soil conditions and general site characteristics and suitability of the site for the proposed construction. A registered design professional shall prepare the report.

**PAD CERTIFICATION REPORT.** An interim grading report stamped and signed by a registered design professional certifying that the building pad currently is in conformance with the recommendations set forth in the geotechnical report of record.

**PAD RECERTIFICATION REPORT.** A report stamped and signed by a registered design professional certifying that the building pad currently is in conformance with the

recommendations set forth in the geotechnical report of record. This report contains explicit information and data that verifies compliance to the geotechnical report of record including any approved supplements or addendums.

**REFUSAL.** Refusal while advancing an exploration is recognized as a Standard Penetration blow count, as defined by ASTM 1586-99, exceeding 100 blows per full lineal foot.

**SPECIAL GEOTECHNICAL CONSIDERATION AREA.** A portion of Clark County where additional geotechnical investigation requirements may apply. These areas are identified on the most recent edition of the "Clark County Soil Guidelines Reference Map(s)" as published by Clark County.

**Appendix J Section J103 Permits required.**

*Adopt Appendix J Section J103.1 through J103.2 unchanged.*

**Appendix J Section J103.3**

*Add Section J103.3 to read as follows:*

**J103.3 Hazards.** Whenever the building official determines that any existing excavation or embankment or fill on private property has become a hazard to life and limb, or endangers property, or adversely affects the safety, use or stability of a public way, easement, or drainage channel, the owner of the property upon which the excavation or fill is located, or other person or agent in control of said property, upon receipt of notice in writing from the Building Official, shall within the period specified therein repair or eliminate such excavation or embankment to eliminate the hazard and to be in conformance with the requirements of this code.

**Appendix J Section J104 Permit applications and submittals.**

*Adopt Appendix J Section J104.1 unchanged.*

**Appendix J Section J104.2 Grading Plan Requirements**

*Adopt and amend Section J104.2 to read as follows:*

**J104.2 Grading plan requirements.** All grading plans shall be prepared, stamped, and signed by a registered design professional. The following items must be included on all grading plan submittals.

1. General vicinity of the proposed site.
2. Property limits and accurate contours of existing ground and details of terrain and area drainage.
3. Limiting dimensions, elevations or finish contours to be achieved by the grading, proposed drainage channels and related construction.
4. Location of any buildings or structures on the property where the work is to be performed and the location of any buildings or structures on land of adjacent

owners that are within 100 feet of the property or that may be affected by the proposed grading operations.

5. Recommendations included in the geotechnical and the engineering geology report shall be incorporated in the grading plans or specifications as follows:
   a. Locations and dimensions of all cut and fill slopes,
   b. Locations of all cross sections presented in the geotechnical report,
   c. Locations and sizes of all recommended remedial measures such as buttress fills, stability fills, deep foundation systems, reinforced earth, retaining walls, etc.,
   d. Location and layout of proposed subdrainage system.
6. A statement that the site shall be graded in accordance with the approved geotechnical report. This statement shall include the firm name that prepared the geotechnical report, the report number, and the date of the geotechnical report.
7. Locations of other existing topographic features either natural or man-made such as streets, drainage structures, pavements, walls, mining pits, etc.
8. The cut to fill transition line.
9. Positive drainage away from the foundation per Section 1803.3.
10. Details and cross sections at property lines, fence walls, retaining walls, berms, etc.
11. Elevation datum and benchmarks (NAVD 88).
12. Existing contours at least 100 feet beyond the property lines.
13. Proposed finish contours or spot elevations at the property corners and at swale flow lines.
14. Elevations of curbs or centerlines of roads or streets.
15. Earthwork quantities in cubic yards.
16. Finish floor elevations.
17. Details and cross sections of typical fill slopes and cut slopes.
18. Typical details of fill-over-natural slopes and fill-over-cut slopes where fill is to be placed on natural or cut slopes steeper than 5H:1V in accordance with Section J107.
19. Setback dimensions of cut and fill slopes from site boundaries per Section J108.
20. The placement of buildings and structures on and or adjacent to slopes steeper than 3H:1V (33.3% slope) shall be in accordance with Section 1805.3.
21. Provide terracing in accordance with Section J109 for slopes steeper than 3H:1V (33.3% slope).
22. Provide the locations and dimensions of all terrace drains for all slopes steeper than 3H:1V in accordance with Section J109.
23. Registered design professional original seal (wet seal), signature and date or a Records stamp and signature stating, "*This is a true and exact copy of the original document on file in this office.*"

**Appendix J Section J104.3 Soils report.**

*Adopt Appendix J Section J104.3 through J104.4 unchanged.*

**Appendix J Section J105.1 Inspections.**

*Adopt and amend Section J105.1 to read as follows:*

**J105.1 General.** Inspection of grading operations shall comply with the provisions of this section. The permittee shall be responsible for the work to be performed in accordance with the approved plans and specifications and in conformance with the provisions of this code. The permittee shall engage an approved agency, if required by the Building Official.

**Appendix J Section J105.1.1 Inspections.**

*Add Sections J105.1.1 through J105.1.7 to read as follows:*

**J105.1.1 Completion of work and final reports**. Report submittal shall be in compliance with Section 1704.1.2.

**J105.1.2 Final Grading report.** Upon completion of pad grading (or foundation construction) and prior to a footing or foundation inspection, a Final Grading report shall be provided by an approved agency. Grading (or foundation construction) shall be observed and tested by an approved agency. The approved agency shall prepare the report, signed by a registered design professional certifying that the grading and earthwork are complete and substantially comply with the requirements of the geotechnical report of record including any approved supplements or addenda. At the option of the Building Official, a Pad Certification report submitted in accordance with Section J105.1.3 may be accepted as an interim report prior to a footing or foundation inspection. A Final Grading report will then be required prior to receiving a Final Inspection.

The Final Grading Report itself will contain all applicable test data and analysis of the data. Specific project information is also required if there were any changes to the geotechnical report of record or unusual circumstances encountered during grading. The report shall also include the following information:

1. Compaction test results, requirements, locations, depth of backfill at test locations and names of technicians conducting the tests.
2. Moisture Density values and curves that include classifications for all soils used in the grading operation.
3. Description of structure or pad including the proposed use.
4. Grading plan showing approximate locations of tests, dates and depths of over-excavation observations, original contours and finish pad elevations.
5. Swell and solubility test requirements and results. This information shall be provided if required by the geotechnical report of record, elsewhere in the code, or if imported soils were utilized.
6. Type of foundation system applicable to work being certified (i.e. spread footings, strip footings, combination footings, drilled shafts etc.).
7. Import material used, source of import, and tests indicating compliance with the geotechnical report of record recommendations, and classification in relation to ACI 318 Section 4.3.

8. A statement describing the process of pad grading. Where applicable, this shall include, but not be limited to the minimum depth of over-excavation, blending operations, the use of import soils, nested aggregate, organics encountered, and removal of unsuitable soils.
9. The preceding requirements shall be presented for each pad or structure being certified.

The Final Grading report remains valid for a maximum of six months after the completion of grading. The six month period begins at the first test date of the final test of the final lift of the structural pad. Once expired, a Pad Recertification report is required.

**J105.1.3 Pad Certification report.** This letter/report is used as an interim document until a Final Grading report is completed (i.e., a Final Grading report for the entire project or a particular phase(s) of a project). The approved agency shall prepare this report signed by a registered design professional and certifying that the grading and earthwork are complete and substantially comply with the requirements of the geotechnical report of record including any approved supplements or addenda. Specific project information is also required if there were any changes to the geotechnical report of record or unusual circumstances encountered during grading.

This report shall include the following information for each pad or structure:

1. The first test date of the final test of the final lift.
2. Permit number and pad or structure description.
3. Classification of foundation soils in relation to ACI 318 Section 4.3.
4. Classification of foundation soil for expansive properties (i.e. non-expansive or results from standard 60 pounds per square foot swell test).
5. The name(s) of the approved special inspector(s) and any technicians that observed grading or foundation improvements.

This report remains valid for no longer than six months after the completion of grading. The six month period begins at the first test date of the final test of the final lift of the structural pad. Upon expiration, a Final Grading report and Pad Recertification report will be required.

**J105.1.4 Pad Recertification report.** This report is required when a Final Grading report or Pad Certification report has expired or if required by the Building Official. The approved agency shall prepare this report signed by a registered design professional certifying the current suitability of the pad(s). The condition of the pad(s) is discussed, tests performed and their results are presented and discussed, and any additional grading or reworking is discussed. The conclusions are stated and based upon the current condition of the pad(s) compared to completion at original grading and a statement that the current condition of the pad(s) substantially complies with the requirements of the geotechnical report of record including any approved supplements or addenda.

As a minimum, pad moisture data and standard sixty pounds per square foot swell test results, if applicable, are included in this report. The tests shall be conducted on a representative number of pads.

The report remains valid for no longer than six months after the latest test date. Once expired, the pad(s) recertification will require an evaluation by a registered design professional to confirm the applicability of current site conditions.

**J105.1.5 Finished Floor Elevation Certificate.** A Nevada Professional Land Surveyor shall certify the lowest habitable finished floor elevation to the elevation on the approved plans upon completion of the slab inspection and placement or the placement of the final construction form for the finished floor. All certifications required by this section shall be provided to and accepted by the Building Official prior to performance of any additional inspections. The minimum finished floor elevation shall comply with the approved plans and the allowable tolerance shall be minus (-) 0.0 feet to plus (+) 0.3 feet of the finished floor elevation detailed on the approved plans.

**J105.1.6 Drainage Compliance Report.** Upon completion of final grading, and prior to the final building inspection, a statement of compliance for drainage shall be provided by the registered design professional of record or the developer when approved by the building official.

This report shall state that site conditions at the time of final construction provide positive drainage in compliance with the approved drainage plan or the plot and grading plan.

When engineered drainage features, facilities, or structures are required by the approved plans, the register design professional of record shall verify that installed and constructed elements are in compliance with the approved plans. This includes site detention, lot to lot drainage, and drainage conveyance devices.

**J105.1.7 Notification of Noncompliance.** If in the course of fulfilling their respective duties under this appendix, the registered design professional or the approved agency finds that the work is not being done in conformance with this appendix or the approved plans the discrepancies shall be immediately reported in writing to the contractor, the permittee, and to the Building Official.

**Appendix J Section J105.2 Special Inspections.**

*Adopt and amend Section J105.2 to read as follows:*

**J105.2 Special Inspections.** The special inspection requirements of Section 1704 shall apply to work performed under a grading permit where required by the building official.

**Appendix J Section J106 Excavations.**

*Adopt Appendix J Section J106 through J111 unchanged.*

**Appendix L Fences, walls and retaining walls.**

*Add Appendix L to read as follows:*

## Appendix L Fences, walls and retaining walls.

### L101 General

**L101.1 General.** It shall be unlawful for any person, contractor, firm or corporation to erect, install, construct or replace any fence, wall or retaining wall contrary to the provisions of this code.

**L101.2 Applicable regulations.** All regulations and requirements of the Building Code and any amendments, deletions and additions thereto shall apply to the erection, installation or construction of any fence, wall and/or retaining wall except that which may be inconsistent with this chapter.

### L102.0 DEFINITIONS

**L102.1 Definitions.** For the purpose of this appendix chapter, certain terms are defined as follows:

**CUT.** See Excavation.

**EXCAVATION.** The removal of earth material by artificial means, also referred to as a cut.

**FENCE.** A structure of temporary or semi-permanent material such as wrought iron, wire, wood, screen, vinyl, plastic, etc... erected for purposes of enclosure, division of property or decoration.

**FILL.** The deposition of earth materials by artificial means.

**RETAINING WALL.** Any wall that is used to resist the lateral displacement of earth or any other material with a difference in elevation of the material from one side to the other exceeding 24 inches (610 mm) in height.

**ROCKERY WALL.** A system of stacked rocks constructed to retain soil.

**WALL.** A structure of stone, brick, masonry, concrete or other similar permanent material, raised to some height and erected for purposes of enclosure, division of property or decoration.

### L103.0 PERMITS

**L103.1 Permits required.** No fence, wall or retaining wall regulated by this code shall be erected, constructed, enlarged, altered, repaired, moved, improved, removed, converted or demolished unless a separate permit for each fence, wall or retaining wall is obtained from the Building Official.

**L103.2 Separate permits required.** A separate permit is required for each parcel of land upon which a fence, wall or retaining wall is to be located.

> **EXCEPTION:** Only one permit is required for multiple fence(s), wall(s) and/or retaining wall(s) constructed along property lines in connection with the development of a subdivision, provided that a legal description of the property is submitted together with a dimensioned plot plan showing the exact location of the fence, wall and/or retaining wall and all other recorded lot and easement lines.

**L103.3 Application for a fence, wall or retaining wall permit.** To obtain a permit, the applicant shall first file an application on a form furnished by the jurisdiction for that purpose. The application shall include the following:

1. The name and address of the owner of the real property upon which the fence, wall and/or retaining wall is to be located.
2. The type of material to be used for construction of the fence, wall, and/or retaining wall.
3. The total length, height and square footage of each fence, wall and/or retaining wall.
4. The authorized agent to perform construction.
5. A dimensioned drawing that identifies the location of each fence, wall and/or retaining wall with respect to the property or lot lines, easements, streets, other rights-of-way. Existing construction and drainage features shall be clearly identified on the drawings.
6. The location of all light standards, gas and water meters, and fire hydrants.
7. Other information deemed pertinent by the Building Official.

**L103.4 Drawings and specifications.** Drawings and specifications required for retaining walls shall be prepared by a registered design professional. The design shall be in accordance with the applicable chapters of the IBC. Rockery walls shall be designed in accordance with the IBC and the Southern Nevada Building Officials Rockery Wall Construction Standards.

Drawings or specifications for fences and walls need not be submitted unless required by the Building Official. Drawings and specifications shall be submitted for retaining walls showing that the retaining wall is designed in accordance with this code.

## L104.0 GENERAL REQUIREMENTS AND LIMITATIONS

**L104.1 General.** General requirements and limitations shall be as follows:

1. No fence, wall and/or retaining wall shall be placed within a right-of-way unless granted permission by the authority having jurisdiction.
2. The height and location of a fence, wall and/or retaining wall shall comply with all zoning ordinances and regulations of the authority having jurisdiction.
3. Fences, walls and/or retaining walls shall be constructed in accordance with published standards of the department or agency having authority of utility easements, when located within a utility easement for any light standard, gas meter, water meter, or fire hydrant.

4. Special inspection, if required, shall be in accordance with the IBC. Rockery walls shall require special inspection in accordance with the IBC and the Southern Nevada Building Officials Rockery Wall Construction Guidelines.

**L104.2 Required inspections**

1. All footings shall be inspected to verify location to property line, structures, and compliance to the approved plans and permit. Footings shall be excavated and cast against the earth.
2. Concrete foundations shall not be placed until footings have been inspected and approved by the Building Official.
3. No wall and/or retaining wall shall be grouted until the reinforcing required has been inspected and approved by the Building Official.
4. No retaining wall shall be backfilled until verification of the required dampproofing and drainage has been inspected and approved by the Building Official.

**L104.3 Natural drainage.** No permits shall be issued for fences, walls and/or retaining walls, which would block any natural flow path.

**L104.4 Prohibited materials.** Walls, fences and retaining walls shall not be constructed of materials which impose a direct safety hazard, such as pointed posts, stakes or pickets, components intended for electrocution, embedded glass, nails, barbed or razor type wire, or other sharp, cutting objects.

> **EXCEPTION:** Manufactured barbed or razor wire may be used when its detailed use, location, and construction requirements are approved by the authority having jurisdiction.

## L105.0 IMPLEMENTATION

**L105.1 Implementation.** The Building Official is empowered to formulate procedural guidelines to be used in implementing this chapter.

# Southern Nevada Amendments

# To The

# 2006

# International Residential Code

Published: October 12, 2006

**Clark County**
4701 West Russell Road
Las Vegas, NV 89118
(702) 455-3000

**City of Las Vegas**
731 S. 4th Street
Las Vegas, NV 89101
(702) 229-6251

**City of Henderson**
240 Water Street
Henderson, NV 89015
(702) 267-3650

**Boulder City**
401 California Avenue
Boulder City, NV 89005
(702) 293-9282

**North Las Vegas**
2240 Civic Center Drive
North Las Vegas, NV 89030
(702) 633-1577

**City of Mesquite**
11 East 100 South
Mesquite, NV 89024
(702) 346-2835

**Pahrump Regional Planning District**
1210 E. Basin Ave. St. 1
Pahrump, NV 89060
(775) 751-3773

# PREFACE

This document comprises the Southern Nevada Amendments to the 2006 International Residential Code as published by the International Code Council. The Amendments were developed by the jurisdictions listed on the cover page to be adopted by reference. These Amendments are not to be considered part of a local government's building code unless they have been adopted by that local government. These Amendments are not intended to prevent the use of any material or method of construction not specifically prescribed herein, provided any alternate has been approved and its use authorized by the building official. This document is available to be adopted by any jurisdiction without permission or approval from the jurisdictions listed on the cover page.

## CHAPTER 1 ADMINISTRATION

Chapter 1 is deleted in its entirety except Section R101.

### R101.1 Title

Section R101.1 is amended to read as follows:

**R101.1 Title** These provisions shall be known as the *Residential Code for One- and Two-family Dwellings* of the City of Las Vegas, City of North Las Vegas, City of Henderson, City of Boulder City, City of Mesquite, City of Pahrump and Clark County, and shall be cited as such and will be referred to herein as "this code."

### R101.2 Scope

Section R101.2 is amended to read as follows:

The provisions of the *International Residential Code for One- and Two-family Dwellings*, shall apply to the construction, alteration, movement, enlargement, replacement, repair, equipment, use and occupancy, location, removal, and demolition of detached one- and two-family dwellings and townhouses not more than three stories above-grade in height with a separate means of egress and their accessory structures. Where this code refers to codes not adopted by the jurisdiction, the applicable code adopted by the jurisdiction shall govern.

### R301.1.2 Construction systems

Section R301.1.2 is amended by adding a second paragraph to read as follows:

All structural plain (unreinforced) concrete, plain (unreinforced) masonry, and rubble stone masonry construction is prohibited. All tables, figures and references for these unreinforced systems shall be deleted.

### Table R301.2(1) Climatic and Geographic Design Criteria

Table R301.2(1) is amended to read as follows:

# TABLE R301.2(1)
# CLIMATIC AND GEOGRAPHIC DESIGN CRITERIA

| GROUND SNOW LOAD | WIND SPEED[d] (mph) | SEISMIC DEISGN CATEGORY[f] | SUBJECT TO DAMAGE FROM | | | | DESIGN DRY-BULB TEMP[e] | ICE BARRIER UNDER-LAYMENT REQUIRED[h] | FLOOD HAZARDS[g] | AIR FREEZING INDEX[i] | MEAN ANNUAL TEMP[j] |
|---|---|---|---|---|---|---|---|---|---|---|---|
| | | | Weathering[a] | Frost line depth[b] | Termite[c] | | | | | | |
| 0<2000'<br>5<3600'<br>10<4500' | 90 | $D_0$ | Negligible | 1'<5000' | Moderate to heavy | | Winter 27°F<br>Summer 112°F | No | ✱ | 35 (°F-days) | 66.3°F |

## SPRING MOUNTAIN RANGE

| GROUND SNOW LOAD | WIND SPEED[d] (mph) | SEISMIC DEISGN CATEGORY[f] | SUBJECT TO DAMAGE FROM | | | | DESIGN DRY-BULB TEMP[e] | ICE BARRIER UNDER-LAYMENT REQUIRED[h] | FLOOD HAZARDS[g] | AIR FREEZING INDEX[i] | MEAN ANNUAL TEMP[j] |
|---|---|---|---|---|---|---|---|---|---|---|---|
| | | | Weathering[a] | Frost line depth[b] | Termite[c] | | | | | | |
| 10<4500'<br>15<6000'<br>IBC for Elevations >6000' | 90 | $D_0$ | Severe | 1'<5000'<br>3'>5000' | Moderate to heavy | | Winter 5°F<br>Summer 92°F | Yes | ✱ | 734 (°F-days) | 48.1°F |

For SI: 1 pound per square foot = 0.0479 kN/m$^2$, 1 mile per hour = 0.447 m/s.

a. Weathering may require a higher strength concrete or grade of masonry than necessary to satisfy the structural requirements of this code. The weather column shall be filled in with the weathering index (i.e., "negligible," "moderate" or "severe") for concrete as determined from the Weathering Probability Map [Figure R301,2(3)]. The grade of masonry units shall be determined from ASTM C34, C55, C62, C73, C90, C129, C145, C216 or C652.
b. The frost line depth may require deeper footings than indicated in Figure R403.1(1). The jurisdiction shall fill in the frost line depth column with the minimum depth of footing below finish grade.
c. The jurisdiction shall fill in this part of the table to indicate the need for protection depending on whether there has been a history of local subterranean termite damage.
d. The jurisdiction shall fill in this part of the table with the wind speed from the basic wind map [Figure R301.2(4)]. Wind exposure category shall be determined on a site-specific basis in accordance with Section R301.2.1.4
e. The temperature shall be permitted to reflect local climate or local weather experience as determined by the building official.
f. The jurisdiction shall fill in this part of the table with the Seismic Design Category determined from Section R301.2.2.1.
✱ g. September 27. 2002 " The Flood Insurance Study for Clark County, Nevada and Incorporated Areas", as amended or revised with the accompanying Flood Insurance Rate Map (FIRM) and Flood Boundary and Floodway Map (FBFM) and related supporting data along with any revisions thereto.
h. In accordance with Sections R905.2.7.1, R905.4.3.1, R905.5.3.1, R905.6.3.1, R905.7.3.1 and R905.8.3.1, where there has been a history of local damage from the effects of ice damming, the jurisdiction shall fill in this part of the table with "YES". Otherwise, the jurisdiction shall fill in this part of the table with "NO".
i. The jurisdiction shall fill in this part of the table with the 100-year return period air freezing index (BF-days) from Figure R403.3(2) or from the 100-year (99%) value on the National Climatic Data Center data table "Air Freezing Index-USA Method (Base 32° Fahrenheit)" at www.ncdc.noaa.gov/fpsf.htm.
j. The jurisdiction shall fill in this part of the table with the mean annual temperature from the National Climatic Data Center data table "Air Freezing Index-USA Method (Base 32° Fahrenheit)" at www.ncdc.noaa.gov/fpsf.htm.

**R301.2.2 Seismic provisions**

Section R301.2.2 is amended by deleting the Exception with no replacement.

**R301.3 Story height**

Section R301.3 items 1, 2, and 3 are amended to read as follows:

1. For wood wall framing, the laterally unsupported bearing wall stud height permitted by Table R602.3(5) plus a height of floor framing not to exceed 16 inches, except that a floor framing greater than 16 inches and not exceeding 24 inches, the braced wall length required by Table R602.10.1 shall be multiplied by 1.05.

   **Exception:** For wood framed wall buildings with bracing in accordance with Table R602.10.1, the wall stud clear height used to determine the maximum permitted story height may be increased to 12 feet without requiring an engineered design for the building wind and seismic force resisting systems provided that the length of bracing required by Table R602.10.1 is increased by multiplying by a factor of 1.20. Wall studs are still subject to the requirements of this section.

2. For steel wall framing, a stud height of 10 feet, plus a height of floor framing not to exceed 16 inches. Where floor height is between 16 inches and 24 inches, the minimum percentage of full height structural sheathing shall be multiplied by 1.05.

3. For masonry walls, a maximum bearing wall clear height of 12 feet plus a height of floor framing not to exceed 24 inches.

   **Exception:** An additional 8 feet is permitted for gable end walls.

**Table R301.5 Minimum Uniformly Distributed Live Loads**

Table R301.5 is amended by changing the live load figure for sleeping rooms as follows:

| | |
|---|---|
| Sleeping rooms | 40 |

Table R301.5 is further amended by adding footnote "j" to read as follows:

j. Where it can be determined in designing floor that the actual live load will be greater than the value shown in Table R301.5, the actual live load shall be used in the design of such buildings or portions thereof. Special provisions shall be made for machine and apparatus loads.

**R301.6 Roof load**

Section R301.6 is amended by adding a second sentence, so that the section reads as follows:

**R301.6 Roof load.** The roof shall be designed for the live load indicated in Table R301.6 or the snow load indicated in Table R301.2(1), whichever is greater. Roof live loads in accordance with Section 1607.11 of the 2006 International Building Code may be used in place of the loads in Table R301.6.

**R302.1 Exterior walls**

Section R302.1 is amended by adding a second paragraph and a new exception 4.

To determine when protection is required by Table R302.1 the dimension shall be determined from the property line to the finish face of the wall, except where the foundation dimension from property line is 5 feet or greater the foundation dimension will be used for that wall only.

4. When the wall is at 5 feet or greater to the property line with no attic vents or gable end vents along that line a maximum of 12 inch unprotected eave overhang is permitted.

**R305.1 Minimum height**

Section R305.1 is amended by revising exception 4 to read as follows:

4. Bathrooms shall have a minimum ceiling height of 6 feet 8 inches (2036 mm) over the fixture and at the front clearance area for fixtures. A shower or tub equipped with a shower head shall have a minimum ceiling height of 6 feet 8 inches (2036 mm) above a minimum area 30 inches (762 mm) by 30 inches (762 mm) at the showerhead.

**R307.1 Space required**

Section R307.1 and Figure R307.1 are deleted in their entirety without replacement.

**R307.2 Bathtub And Shower Spaces**

Section R307.2 is renumbered to R307.1

R307.~~2~~1 Bathtub and shower spaces. (Section remains unchanged)

**R309.1 Opening protection**

Section R309.1 is amended to read as follows:

**R309.1 Opening protection.** Openings from a private garage directly into a room used for sleeping purposes shall not be permitted. Other openings between the garage and residence shall be equipped with solid wood doors not less than 1 3/8 inches (35 mm) in thickness, solid or honeycomb core steel doors not less than 1 3/8 inches (35 mm) thick, or 20-minute fire-rated doors, each with a self-closer.

**R401.3 Drainage**

Section R401.3 is deleted in its entirety and replaced with a new Section R401.3 to read as follows:

**R401.3 Drainage.** The ground immediately adjacent to the foundation shall be sloped away from the building at a slope of not less than one unit vertical in 20 units horizontal (5-percent slope) for a minimum distance of 10 feet (3048 mm) measured perpendicular to the face of the wall. If physical obstructions or lot lines prohibit 10 feet (3048mm) of horizontal distance, a 5-percent slope shall be provided to an approved alternative method of diverting water away from the foundation. Swales used for this purpose shall be sloped a minimum of 1 percent along the flow line where located within 10 feet (3048mm) of the building foundation. Impervious surfaces within 10 feet (3048mm) of the building foundation shall be sloped a minimum of 2 percent away from the building.

> **Exception:** Where low expansive, low collapsible, low soluble soil conditions occur or where an exterior asphalt or concrete surface abuts a building, the slope of the ground away from the building foundation is permitted to be reduced to not less than one unit vertical in 48 units (2-percent slope).

**R401.4 Soil tests**

Sections R401.4, R401.4.1, Table R401.4.1, and R401.4.2 are deleted in their entirety, and replaced with a new Section R401.4 to read as follows:

**R401.4 Soil tests.** All structures or additions shall have a soils reports complying with IBC chapter 18.

> **Exception:** At the option of the building official, the following projects may be exempted from having a geotechnical report:
>
> 1. Any structure, addition, or remodel associated with a single family residence with a footprint less than 600 square feet.
>
> 2. Fences.
>
> 3. Site retaining walls less than 5 feet in retained height.
>
> 4. Patio covers, decks, canopies, and carports associated with a single family residence.

Where no soils report is required by the building official the design will be based on maximum bearing pressure of 1,500 psf and assumes a severe sulfate exposure level.

**R403.1.3 Seismic reinforcing**

Section R403.1.3 is amended by deleting the Exception with no replacement.

**R403.1.6.1 Foundation anchorage in Seismic Design Categories C, $D_0$, $D_1$, and $D_2$**

Section R403.1.6.1 is amended by adding the following Exception after item 1 to read as follows:

> **Exception:** Foundation anchorage, spaced as required to provide equivalent anchorage to ½-inch-diameter (13 mm) anchor bolts and square plate washers conforming to section R602.11.1.

**R406.2 Concrete and masonry foundation waterproofing**

Section R406.2 is amended so that the introductory paragraph, before items 1-8, reads as follows:

**R406.2 Concrete and masonry foundation waterproofing.** When the approved geotechnical report indicates there is a high water table or other severe soil-water conditions are known to exist, exterior foundation walls that retain earth and enclose interior spaces and floors below grade shall be waterproofed from the top of the footing to the finished grade. Walls shall be waterproofed in accordance with one of the following:

**R502.3.1 Sleeping areas and attic joists**

Subsection R502.3.1 is deleted in its entirety without replacement.

**R602.6.1 Drilling and notching of top plate**

Section R602.6.1 is amended to read as follows:

**R602.6.1 Drilling and notching of top plate.** When piping or ductwork is placed in or partly in an exterior wall or interior load-bearing wall, necessitating cutting, drilling or notching of the top plate by more than 50 percent of its width, a galvanized metal tie of not less than 0.054 inch thick (1.37mm)(16 ga) and 1½ inches (38mm) wide shall be fastened across and to the plate at each side of the opening with not less than eight 1½" x 0.148" nails at each side or equivalent. See Figure R602.6.1

> **Exception:** When the entire side of the wall with the notch or cut is covered by wood structural panel sheathing.

**FIGURE R606.11(1) ANCHORAGE REQUIREMENTS FOR MASONRY WALLS LOCATED IN SEISMIC DESIGN CATEGORY A, B OR C AND WHERE WIND LOADS ARE LESS THAN 30 PSF**

Figure R606.11(1) is deleted and replaced with a new Figure R606.11(1) to read as follows:

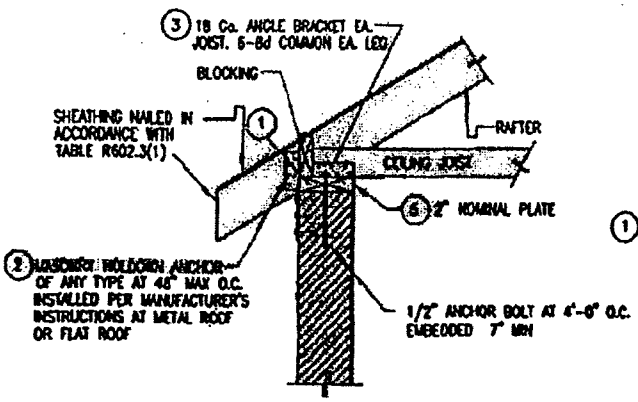


SLOPED ROOF

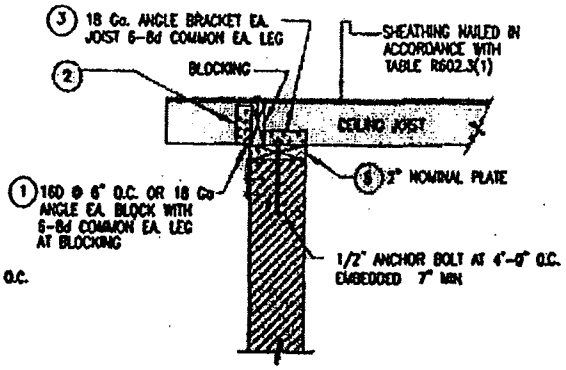


FLAT ROOF

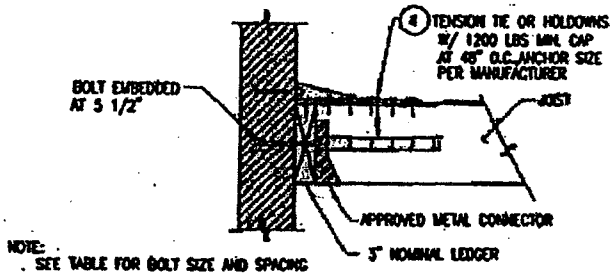


JOIST PERPENDICULAR TO WALL

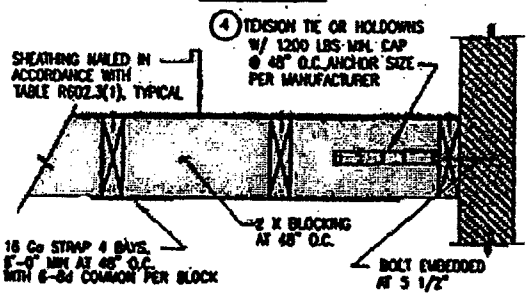


JOIST PARALLEL TO WALL

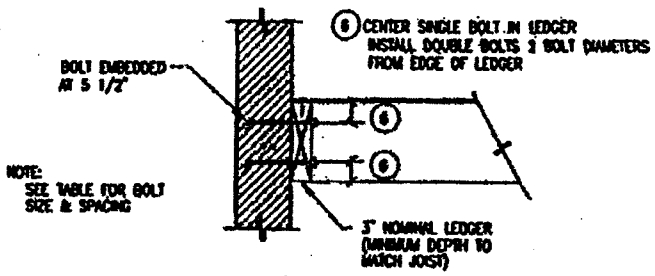


BOLTS AT LEDGER

LEDGER BOLT SPACING AND SIZE[1]

| JOIST SPAN | JOIST PERPENDICULAR TO WALL | | JOIST PARALLEL TO WALL | |
|---|---|---|---|---|
| | BOLT SIZE AND SPACING | | BOLT SIZE AND SPACING | |
| | ROOF | FLOOR | ROOF | FLOOR |
| 10 FT. | 1/2" AT 2 FT. 0 IN.<br>3/4" AT 2 FT. 0 IN. | 1/2" AT 1 FT. 4 IN.<br>3/4" AT 2 FT. 0 IN. | 1/2" AT 2 FT. 0 IN. | 1/2" AT 1 FT. 4 IN.<br>3/4" AT 2 FT. 0 IN. |
| 10–15 FT. | (2) 1/2" AT 2 FT. 0 IN.<br>3/4" AT 2 FT. 0 IN. | (2) 1/2" AT 2 FT 0 IN.<br>3/4" AT 1 FT. 4 IN. | 3/4" AT 2 FT. 0 IN. | 3/4" AT 2 FT. 0 IN. |
| 15–20 FT | (2) 1/2" AT 2 FT. 0 IN.<br>3/4" AT 1 FT. 4 IN. | (2) 1/2" AT 1 FT 4 IN.<br>(2) 3/4" AT 2 FT. 0 IN. | 3/4" AT 2 FT. 0 IN. | 3/4" AT 2 FT. 0 IN. |

1. BOLTS SHALL BE INSTALLED WITH A METAL PLATE, METAL STRAP, OR WASHER NOT LESS THAN A STANDARD CUT WASHER BETWEEN THE WOOD AND THE BOLT HEAD AND BETWEEN THE WOOD AND THE NUT.

NOTE: WHERE BOLTS ARE LOCATED IN HOLLOW MASONRY, THE CELLS IN THE COURSES RECEIVING THE BOLT SHALL BE GROUTED SOLID.
FOR SI: 1 INCH = 25.4 MM, 1 FOOT = 304.8MM, 1 POUND PER SQUARE FOOT = 0.0479KN/M²

FIGURE R606.11(1)

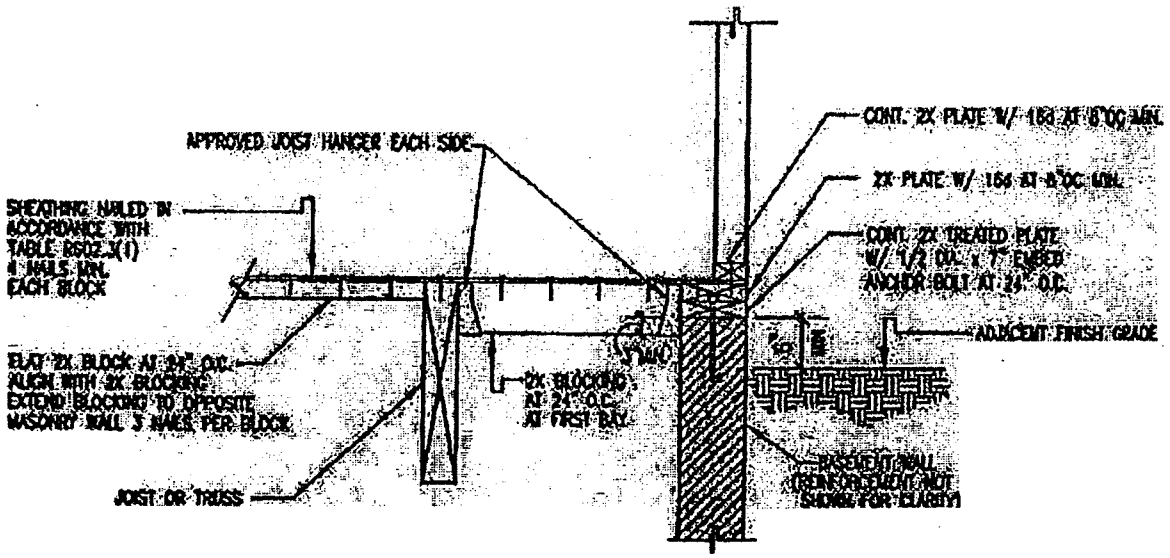


JOIST PARALLEL TO BASEMENT WALL

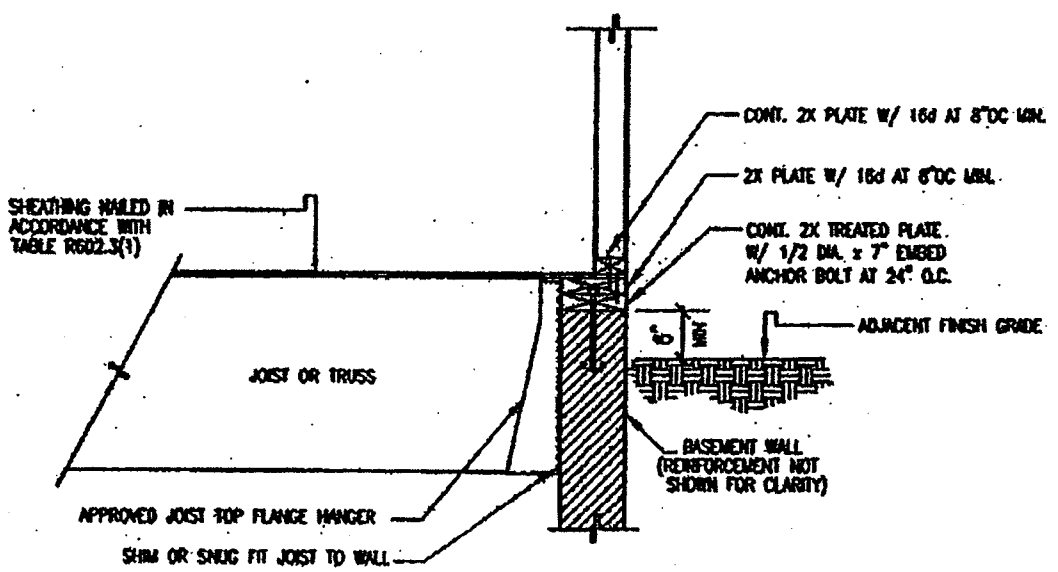


JOIST PERPENDICULAR TO BASEMENT WALL

**NOTE:** WHERE BOLTS ARE LOCATED IN HOLLOW MASONRY, THE CELLS IN THE COURSES RECEIVING THE BOLT SHALL BE GROUTED SOLID.
FOR SI: 1 INCH = 25.4 MM, 1 FOOT = 304.8MM, 1 POUND PER SQUARE FOOT = 0.0479KN/M

FIGURE R606.11(1)
ANCHORAGE REQUIREMENTS FOR MASONRY WALLS LOCATED IN SEISMIC DESIGN CATEGORY A, B OR C AND WHERE WIND LOADS ARE LESS THAN 30 PSI

**R702.3.8 Water-resistant gypsum backing board**

Section R702.3.8 is amended by adding an Exception to read as follows:

> **Exception:** If sealing material is not specified by the manufacture, then a water-resistant flexible sealant meeting ASTM C920, Type S, Grade NS, class 25 material may be used.

**R802.9 Framing of openings**

Section R802.9 is amended to read as follows:

**R802.9 Framing of openings.** Openings in roof and ceiling framing shall be framed with header and trimmer joists. When the header joist span does not exceed 4 feet (1219 mm), the header joist may be a single member the same size as the ceiling joist or rafter. Single trimmer joists may be used to carry a single header joist that is located within 3 feet (914 mm) of the trimmer joist bearing. When the header joist span exceeds 4 feet (1219 mm), the trimmer joists and the header joist shall be doubled and of sufficient cross section to support the ceiling joists or rafter framing into the header. Approved hangers shall be used for the header joist to trimmer joist connections when the header joist span exceeds 6 feet (1829 mm). Tail joists over 12 feet (3658 mm) long shall be supported at the header by framing anchors.

**R807.1 Attic access**

Section R807.1 is amended so that the first paragraph reads as follows:

**R807.1 Attic access.** Buildings with combustible ceiling or roof construction shall have at least one attic access opening. Additional access openings shall be provided to attic areas that have electrical, plumbing, or mechanical fixtures or equipment that require access for periodic maintenance.

> Exception: Access openings are not required for non-contiguous enclosed attic spaces that do not have plumbing, mechanical, or electrical components that require access for periodic maintenance.

**R905.7 Wood shingles**

Section R905.7 is amended to read as follows:

**R905.7 Wood shingles.** Not permitted.

**R905.8 Wood shakes**

Section R905.8 is amended to read as follows:

**R905.8 Wood shakes.** Not permitted.

**R1007 Types Of Fireplaces**

A new section R1007 is added to read as follows:

**R1007 Types of fireplaces.** No fireplace shall be constructed in any residential dwelling in Boulder City or the Las Vegas Valley Hydrographic Basin at an elevation of less than 4000 feet (1220 m) above sea level unless it is one of the following:

a) A fireplace equipped with gas logs with a nationally recognized listing approved by the Building Official.

b) A dedicated natural gas burning factory-built fireplace with a nationally recognized listing approved by the Building Official.

c) A dedicated wood-burning factory-built enclosed fireplace or heater that conforms to the "Phase II Environmental Protection Agency, Standards of Performance for New Stationary Sources, New Residential Heaters" as prescribed in 40 CFR Part 60, Subpart AAA, as verified by a nationally recognized listing approved by the Building Official.

d) A masonry fireplace that includes the installation of a wood-burning insert which meets the standards described in Paragraph c of this Subsection and which is installed in accordance with the manufacture's instructions, or

e) A decorative electrical appliance with a nationally recognized listing approved by the Building Official.

**R1008 Fireplace Requirements**

A new section R1008 is added to read as follows:

**R1008 Fireplace requirements.** A gas or wood-burning fireplace installed within a dwelling unit shall comply with the following requirements:

a) The fireplace opening shall be provided with solid doors such as glass, solid steel, or cast iron.

b) If the fireplace is located in a sleeping room or an adjacent bathroom, then a permanent, unobstructed fresh air supply shall be provided directly from the exterior of the structure to the fire box.

c) When gas is piped to the fireplace, a caution sign shall be installed that states "Caution: Damper must be permanently blocked open if gas is supplied to this fireplace." The letters on the sign shall be a minimum of 3/8 inches in height.

**CHAPTERS 11 through 42.**

Delete chapters 11 through 42 in their entirety.

**Appendices A through G, I, J, L through Q.**

Delete Appendices A through G, I, J, and L through Q in their entirety.