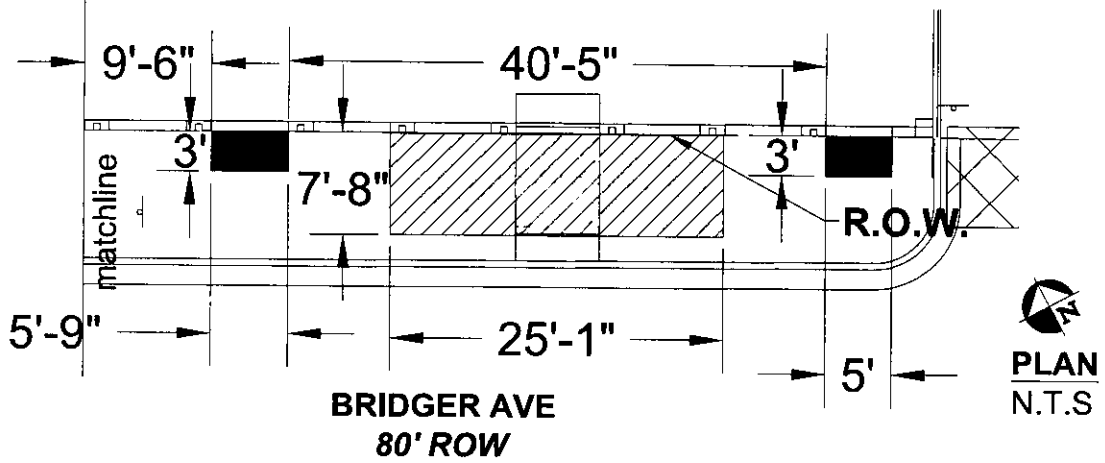

PLAN
N.T.S

LEGEND

AERIAL ENCROACHMENT

PLANTER ENCROACHMENT
NO GRATES WILL BE USED

EXHIBIT "C"

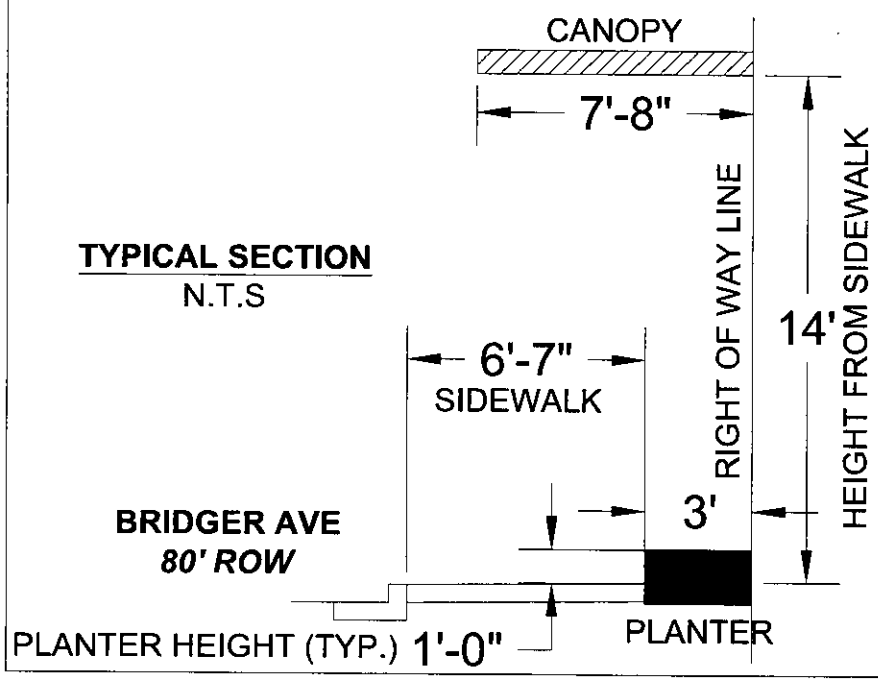

TYPICAL SECTION
N.T.S

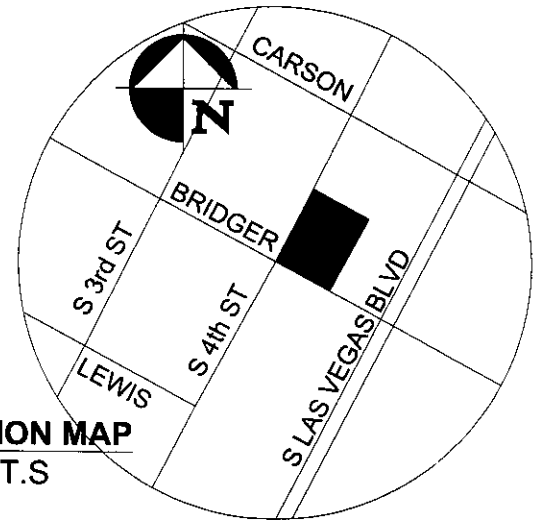

LOCATION MAP
N.T.S

ENCROACHMENT EXHIBIT 3
MEET LAS VEGAS
S 4th ST & BRIDGER
LAS VEGAS, NEVADA