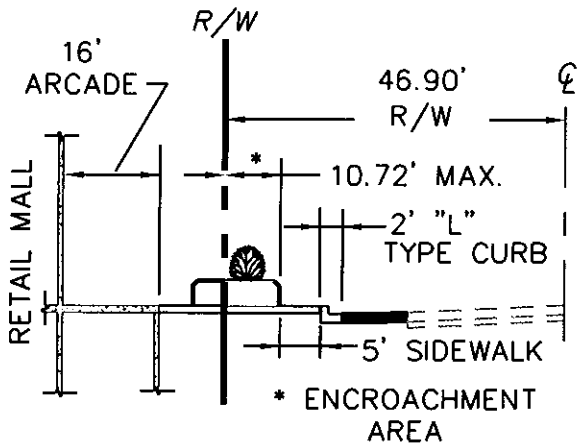

MAIN STREET SECTION 'A'

STATION 14+15.06 – 14+29.76
(PUBLIC) N.T.S.

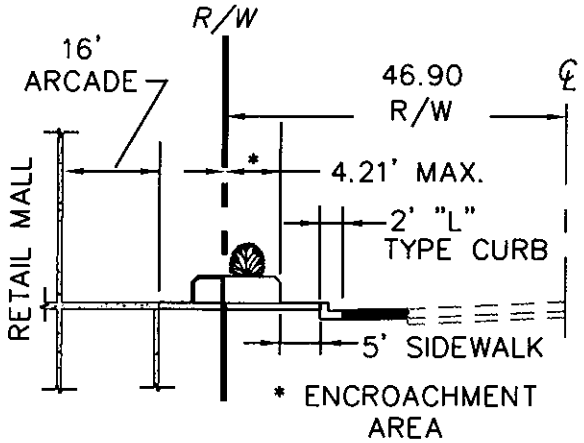

MAIN STREET SECTION 'C'

STATION 10+65.00 – 11+35.18
(PUBLIC) N.T.S.

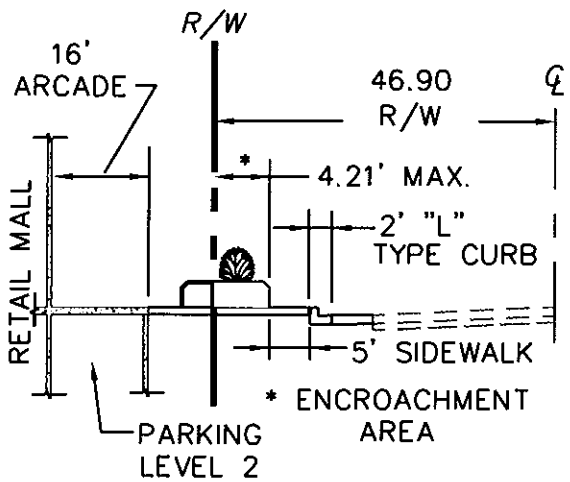

MAIN STREET SECTION 'B'

STATION 12+73.08 – 13+91.44
(PUBLIC) N.T.S.

EXHIBIT "C"