PLANNING & DEVELOPMENT

DEVELOPMENT SERVICES CENTER

PLANNING & DEVELOPMENT DEPARTMENT

STATEMENT OF FINANCIAL INTEREST

Case Number: VAR-22965 APN: 140-29-810-031

Name of Property Owner: Dean L. Smith

Name of Applicant: Dean L. Smith

To the best of your knowledge, does the Mayor or any member of the City Council or Planning Commission have any financial interest in this or any other property with the property owner, applicant, the property owner or applicant's general or limited partners, or an officer of their corporation or limited liability company?

_____ Yes X No

If yes, please indicate the member of the City Council or Planning Commission who is involved and list the name(s) of the person or persons with whom the City Official holds an interest. Also list the Assessor's Parcel Number if the property in which the interest is held is different from the case parcel.

City Official: _____

Partner(s): _____ _____

APN: _____

Signature of Property Owner: Dean L. Smith

Print Name: Dean L. Smith

Subscribed and sworn before me

This 27th day of June, 2007

Casey Davidson

Notary Public in and for said County and State

Notary Public - State of Nevada
COUNTY OF CLARK
CASEY DAVIDSON
No. 06-109302-1 My Appointment Expires August 9, 2010

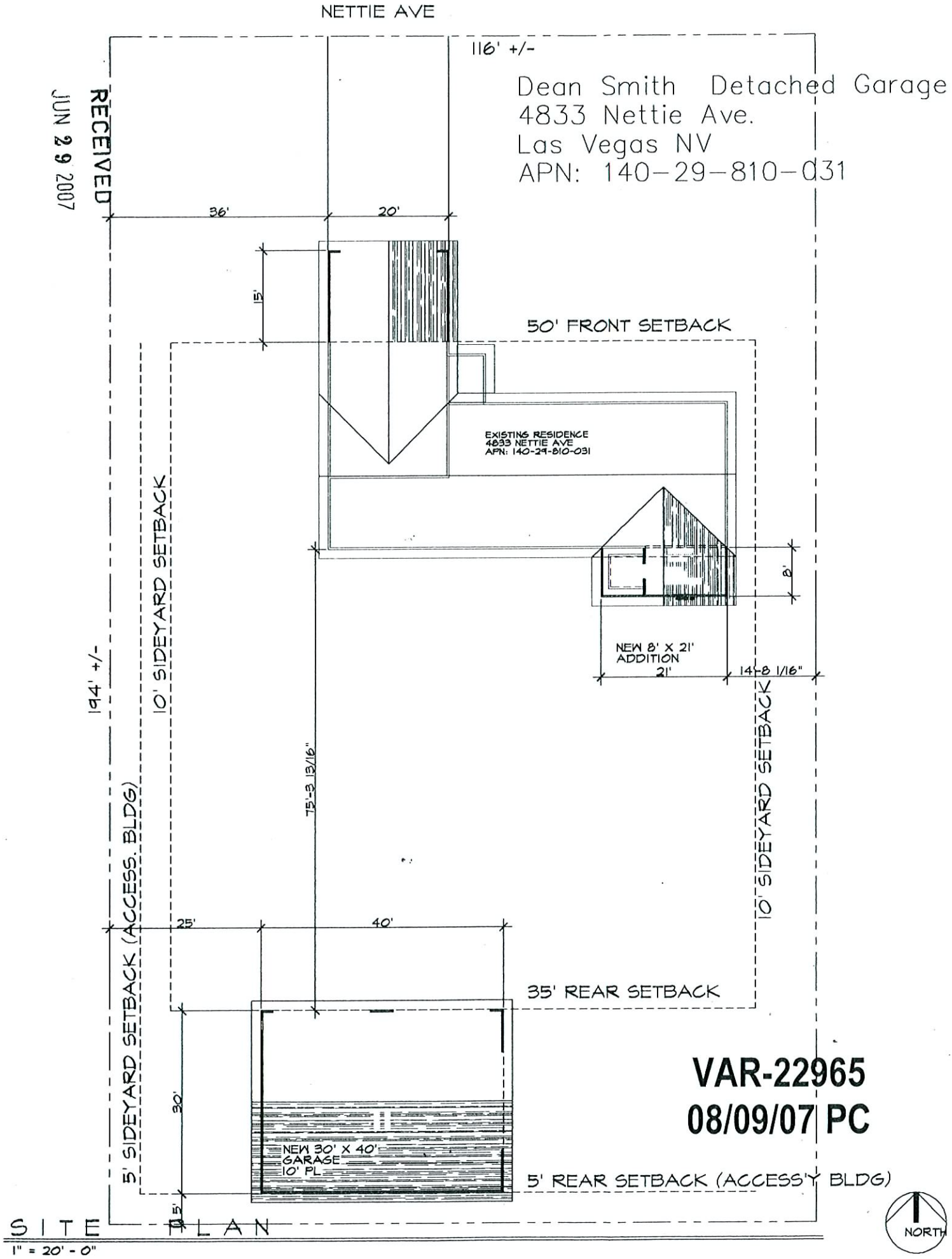

VAR-22965
08/09/07 PC

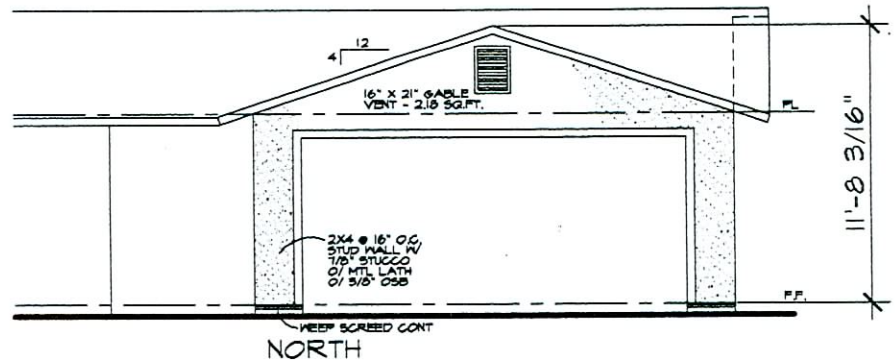

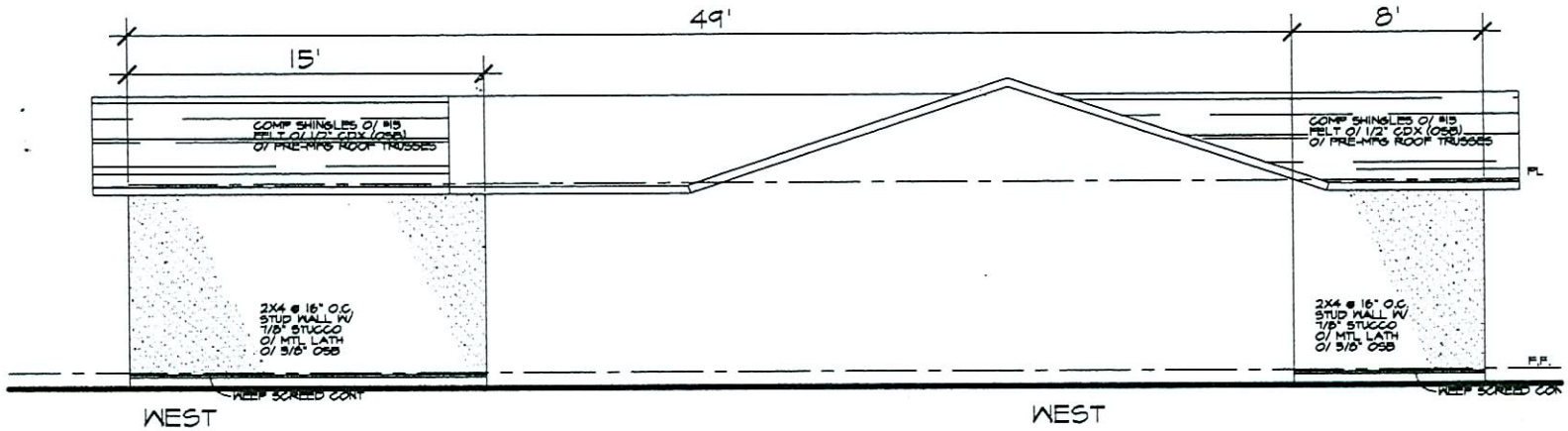

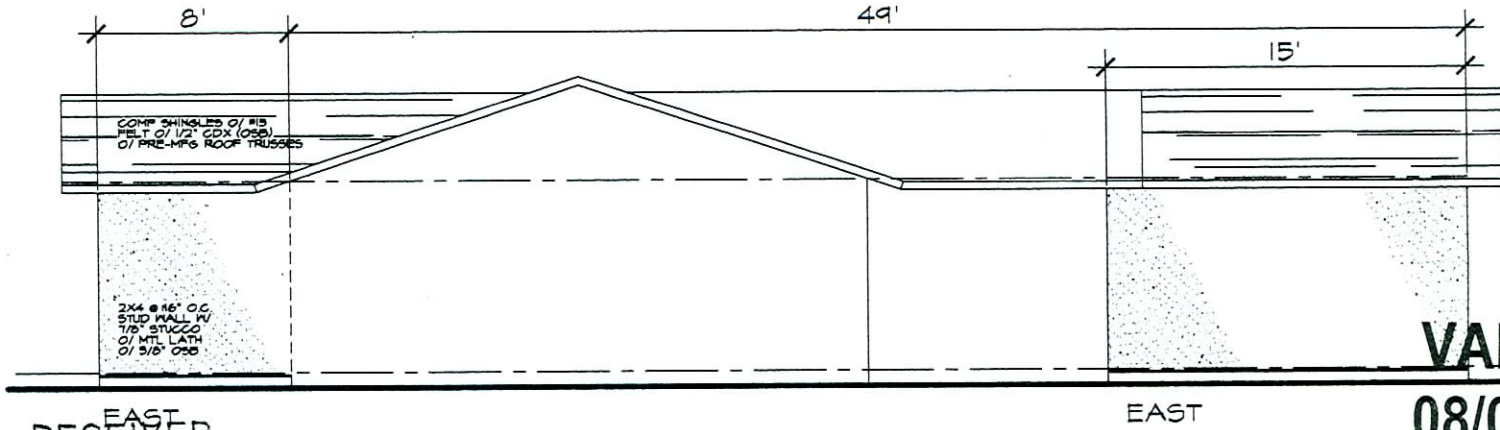

VAR-22965

08/09/07 PC

RECEIVED
JUN 29 2007

ELEVATIONS - GARAGE

1/8" = 1' - 0"

RESIDENCE

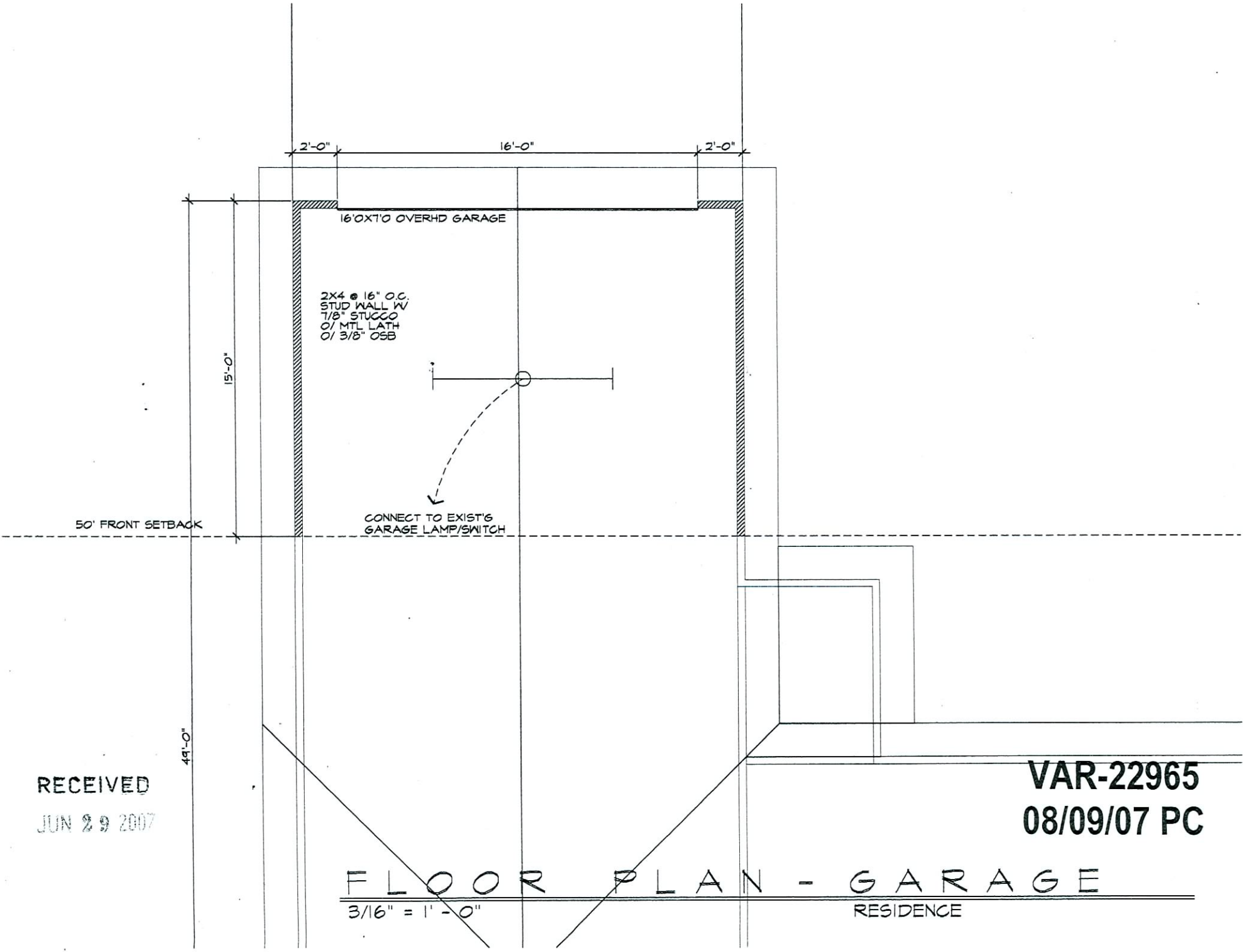

RECEIVED
JUN 29 2007

VAR-22965
08/09/07 PC

FLOOR PLAN - GARAGE

3/16" = 1' - 0"

RESIDENCE

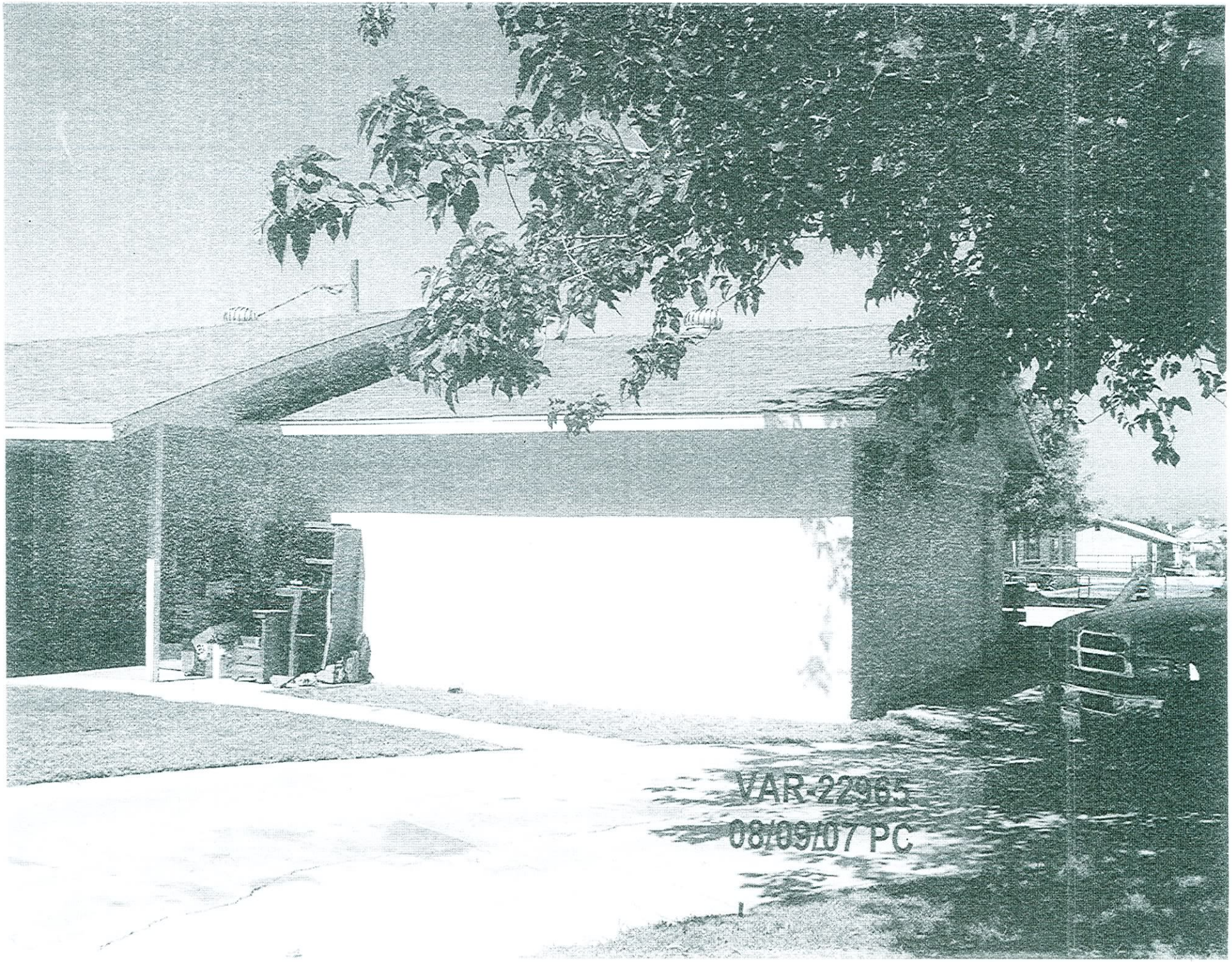
VAR-22965
08/09/07 PC

VAR-22965
08/09/07 PC